beisler SEWING

1220-6

Operating Instructions

IMPORTANT

READ CAREFULLY BEFORE USE

KEEP FOR FUTURE REFERENCE

All rights reserved.

Property of Dürkopp Adler AG and protected by copyright. Any reuse of these contents, including extracts, is prohibited without the prior written approval of Dürkopp Adler AG.

Copyright © Dürkopp Adler AG 2016

General safety instructions

The non-observance of the following safety instructions can cause bodily injuries or damages to the machine.

1. The machine must only be commissioned in full knowledge of the instruction book and operated by persons with appropriate training.

2. Before putting into service also read the safety rules and instructions of the motor supplier.

3. The machine must be used only for the purpose intended. Use of the machine without the safety devices is not permitted. Observe all the relevant safety regulations.

4. When gauge parts are exchanged (e.g. needle, presser foot, needle plate, feed dog and bobbin) when threading, when the workplace is left, and during service work, the machine must be disconnected from the mains by switching off the master switch or disconnecting the mains plug.

5. Daily servicing work must be carried out only by appropriately trained persons.

6. Repairs, conversion and special maintenance work must only be carried out by technicians or persons with appropriate training.

7. For service or repair work on pneumatic systems, disconnect the machine from the compressed air supply system (max. 7-10 bar). Before disconnecting, reduce the pressure of the maintenance unit.
   Exceptions to this are only adjustments and functions checks made by appropriately trained technicians.

8. Work on the electrical equipment must be carried out only by electricians or appropriately trained persons.

9. Work on parts and systems under electric current is not permitted, except as specified in regulations DIN VDE 0105.

10. Conversion or changes to the machine must be authorized by us and made only in adherence to all safety regulations.

11. For repairs, only replacement parts approved by us must be used.

12. Commissioning of the sewing head is prohibited until such time as the entire sewing unit is found to comply with EC directives.

It is absolutely necessary to respect
the safety instructions marked by these signs.

Danger of bodily injuries !

Please note also the general safety instructions.

Index **Page:**

Preface and general safety instructions

Part 1: Operating instructions Cl. 1220-6

1. Description of product
1.1 Description of proper use . . . 3
1.2 Brief description . . . 3
1.3 Technical data . . . 4

2. Optional equipment . . . 5

3. Switching on - Switching off - Program stop
3.1 Switching on . . . 5
3.2 Switching off . . . 5
3.3 Program stop . . . 6
3.4 Restart after program stop . . . 6

4. Operation of the sewing machine head
4.1 General notes . . . 7
4.2 Recommended threads . . . 8
4.3 Removing /Putting on the fabric sliding sheet . . . 9

5. Operation of the sewing unit
5.1 Feeding the trousers parts and starting the sewing process . . . 10
5.2 Adjusting the edge guide . . . 11
5.3 Adjusting the blowing air for the nozzles in the table top . . . 12
5.4 Adjusting the guide blade . . . 12

6. Operation of the control
6.1 Operator terminal . . . 13
6.2 User interface . . . 14
6.2.1 Menu structure of the sewing and setting programs . . . 14
6.3 Seam programs . . . 16
6.4 Adjusting the control . . . 17
6.4.1 Altering seam-specific parameters . . . 17
6.4.2 Altering global parameters . . . 19
6.4.3 Input - Output test . . . 20
6.4.4 Creation of seam programs . . . 21
6.4.5 Deleting a seam program . . . 22
6.4.6 Altering seam programs (Changing /Completing the sequence) . . . 22

7. Error messages . . . 23

Index: **Page:**

8. USB stick

8.1 General notes 24
8.2 Formatting the USB stick 24
8.3 Plugging the USB stick in the control 24
8.4 USB functions 25
8.4.1 Storing data on the USB stick 27
8.4.2 Loading data from the USB stick 27
8.4.3 Data comparison 28
8.4.4 Deleting data from the USB stick 28
8.4.5 Loading software version from the USB stick 29
8.5 Removing the USB stick 30

9. Maintenance

9.1 Cleaning and checking 31
9.2 Oil lubrication 33

1. Description of product

1.1 Description of proper use

The **1220-6** is a sewing unit which can properly be used for sewing light to medium-weight material. Such material is, as a rule, made of textile fibres. These materials are used in the garment industry.

In general only dry material must be sewn on this machine. The material must not contain any hard objects.

The seam is generally made with core thread, polyester fibre or cotton threads.
The dimensions for needle and hook threads can be taken from the table in chapter 4.2.

Before using any other threads it is necessary to estimate the consequential dangers and to take the respective safety measures, if required.

This sewing unit must only be installed and operated in dry and well-kept rooms. If the sewing unit is used in other rooms, which are not dry and well-kept, further measures to be agreed upon may become necessary (see EN 60204-31 : 1999).

We, as a manufacturer of industrial sewing machines, assume that at least semi-skilled operating personnel will be working on our products so that all usual operations and, where applicable, their risks are presumed to be known.

1.2 Brief description

The **Beisler 1220-6** is a single-head sewing unit for serging and overlocking of long skirt and trousers parts. The overlocking of the seat and fly bow as well as of the trousers hem can be integrated.

All sewing unit components are mounted on a stand welded of square steel tubes and controlled by a microprocessor system.

The sewing unit is operated via a control panel. Here it is possible to call up various control programs, to define new programs and to check all inlets and outlets for maintenance and repair purposes.

Machine head

- Pegasus two- or three-thread overlock machine
  EX 5204-02/233-5/KS 371
- Direct drive Efka Type DC 1500 /AB 221
- Microprocessor control, freely programmable
- Light barrier for recognizing the seam beginning and seam end for the automatic sewing start and stop
- Height-adjustable edge guide for different material thicknesses
- External control panel Efka V850 with:
  - Menu navigation
  - Freely programmable parameters for “machine parameters”, “Global parameters”, “Program sequences”
  - Input and output tests
  - 20 program storage locations
  - up to 7 seam programs per program storage location

- Vertical cutter with suction for overlocking and serging in one operation
- Chain separator with suction, programmable
- Adjustable blowing nozzles in the table top for supporting the material feed
- Height-adjustable stand, infinitely variable from 850 mm to 1200 mm
- Integrated stacking device

1.3 Technical data:

Machine head:	Pegasus EX 5204-02/233-5/KS 371	
Stitch type:	504/ 505	
Number of needles:	1	
Needle system:	B27	
Needle size:	Nm 80 to Nm 110	
Threads:	see table chapter 4.2	
Speed:	7000 r/ min	
Speed upon delivery:	7000 r/ min	
Stitch length	min.	1.0 mm
	max.	5.0 mm
Seam width Standard EX-head:	6 mm	
Optional EX-head:	4 mm/ 5 mm	
Standard S52-head:	6 mm	
Optional S52-head:	4 mm/ 5 mm	
Material:	Light to medium-weight material	
Operating pressure:	6 bar	
Air consumption:	20 NL per working cycle	
Rated voltage:	1 x 230 V 50/60 Hz	
Rated load:	0.9 kVA	
Dimensions:	1500 x 900 x 1400 mm (L x W x H)	
Working height:	850...1200 mm (upper table top edge)	
Weight:	120 kg	

Noise level: **LC = 81dB (A)**

Workstation-specific emission value according to DIN 45635-48-B-1

Stitch length:	3 mm		
Seam length:	1160 mm		
Speed:	7000 r/min		
Material:	G1 DIN 23328 1 layer		
Measuring point according to DIN 4895 Part 1	X = 600 mm	Y = 350 mm	Z = 600 mm

x - axis = at right angles to the feeding direction
y - axis = main feeding direction
z - axis = height

2. Optional equipment

See annex

3. Switching on - Switching off - Program stop

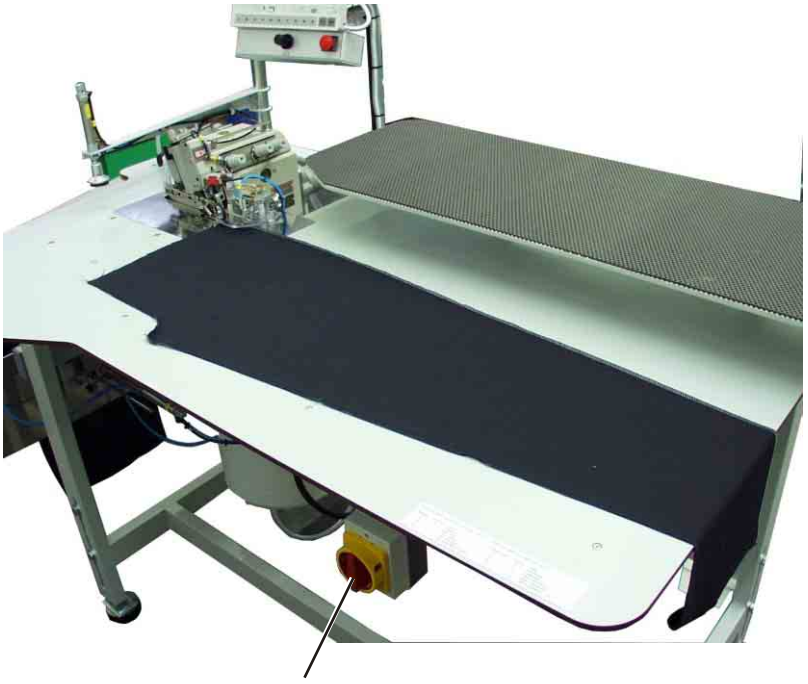

1

3.1 Switching on

– Switch on main switch 1 (turn in clockwise direction).
  The control loads the machine program.
  The basic display appears in the display of the control panel.

3.2 Switching off

– Switch off main switch 1 (turn counter-clockwise).

3.3 Program stop

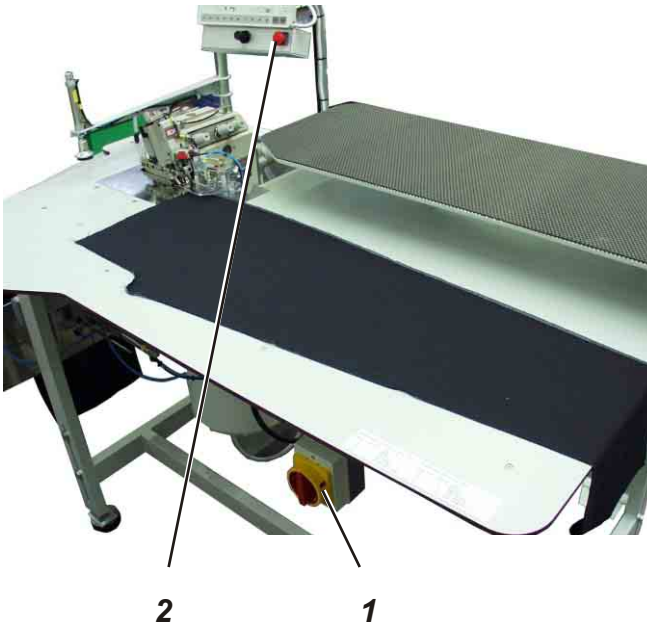

For an immediate stop in case of operating errors, needle breakage etc. the safety system of the 1220-6 provides the following measures:

- Press program stop switch 2 at the control panel.
  The running operations are stopped immediately.
- Turn main switch 1 counter-clockwise.
  The sewing unit drops out immediately;
  all movements of the sewing unit stop immediately.

3.4 Restart after program stop

Caution: Risk of injury!

Switch the main switch off.
Clear the fault only with the sewing unit switched off.

Only restart the sewing unit after the fault has been cleared.

- Switch on main switch 1 (turn in clockwise direction).
- Unlock the program stop switch.
  The control loads the machine program.
  The basic display appears in the display of the control panel.
  The sewing unit is ready for operation again.

4. Operation of the sewing machine head

4.1 General notes

The operation of the sewing machine head (needle insertion, threading of needle thread and hook thread etc.) is described in the attached separate Pegasus operating instructions.

The instruction manual is included in the accessories of the sewing unit.

Attention: Risk of injury!

Please read the operating instructions of the sewing machine head carefully and observe all notes on safety.

4.2 Recommended threads

Needle system:	B27
Recommended needle size:	Nm 80 for very thin material Nm 90 for thin material Nm 100 for medium-weight material Nm 110 for heavy-weight material

High sewing security and good sewability are achieved with the following core threads:

- Two-ply polyester endless polyester core-spun (e.g. Epic Poly-Poly, Rasant x, Saba C, ...)
- Two-ply polyester endless cotton core-spun (e.g. Frikka, Koban, Rasant, ...)

If these threads are not available, the polyester fibre or cotton threads listed in the table can also be sewn.

Often two-ply core threads are offered by the thread manufacturers with the same designation as three-ply polyester fibre threads (3cyl.-spun).This causes uncertainty with regard to twisting and thread thickness.

When in doubt, unravel the thread and check whether it is twisted 2- or 3-ply.
The label no. 120 on the thread reel of a core thread corresponds e.g. to the thread size Nm 80/2 (see table values in brackets).

In case of monofilament threads you can use needle threads and hook threads of the same thickness. The best results are achieved with soft and elastic threads (software) of the thread thickness 130 Denier.

Recommended thread thicknesses:

Needle size Nm	**Core thread**		**Core thread**	
	Needle thread Polyester endless Label No.	Hook thread Polyester core-spun Label No.	Needle thread Polyester endless Label No.	Hook thread Cotton core-spun Label No.
80				
90	120 (Nm 80/2)	120 (Nm 80/2)	120 (Nm 80/2)	120 (Nm 80/2)
100 - 110	100 (Nm 65/2)	100 (Nm 65/2)	100 (Nm 65/2)	100 (Nm 65/2)

Needle size Nm	**Polyester fibre thread (3cyl.-spun)**		**Cotton thread**	
	Needle thread	Hook thread	Needle thread	Hook thread
80	Nm 120/3	Nm 120/3	Ne_B 60/3-80/3	Ne_B 60/3-80/3
90	Nm 80/3-120/3	Nm 80/3-120/3	Ne_B 50/3-70/3	Ne_B 50/3-70/3
100 - 110	Nm 70/3-100/3	Nm 70/3-100/3	Ne_B 40/3-60/3	Ne_B 40/3-60/3

4.3 Removing / Putting on the fabric sliding sheet

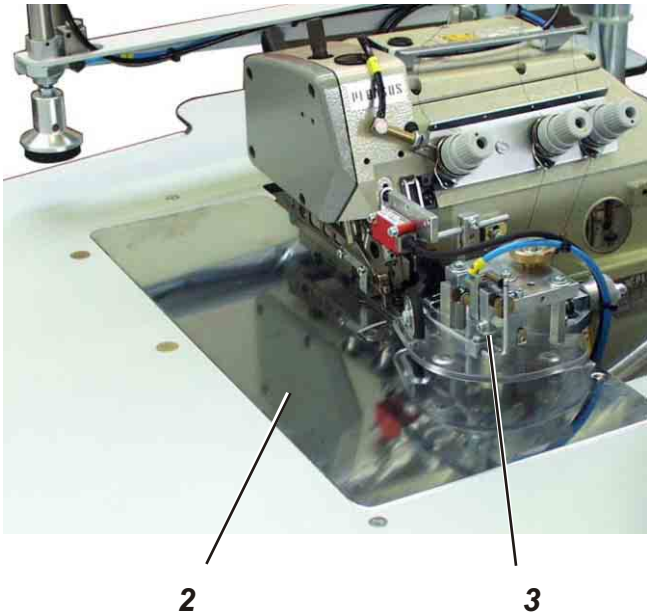

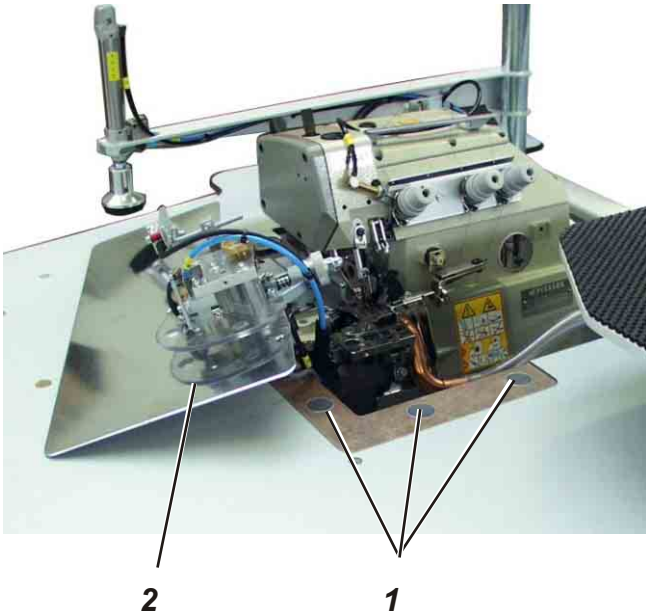

The fabric sliding sheet 2 is held in the gap of the table top by the magnets 1.
The edge guide 3 is fastened on the fabric sliding sheet.

Removing the fabric sliding sheet

– Carefully remove the edge guide 3 from the magnets in upward direction.
– Swivel the fabric sliding sheet aside.
  The lower section of the sewing machine head is accessible now.

Putting on the fabric sliding sheet

– Push the fabric sliding sheet into the gap of the table top and insert in downward direction.

5. Operation of the sewing unit

5.1 Feeding the trousers parts and starting the sewing process

The overlock unit 1220-6 works semi-automatically.
The operator of the sewing unit has to do the following:

- call up the desired seam program;
- feed the material precisely;
- supervise the sewing process of the unit;
- remove the finished parts from the stacker.

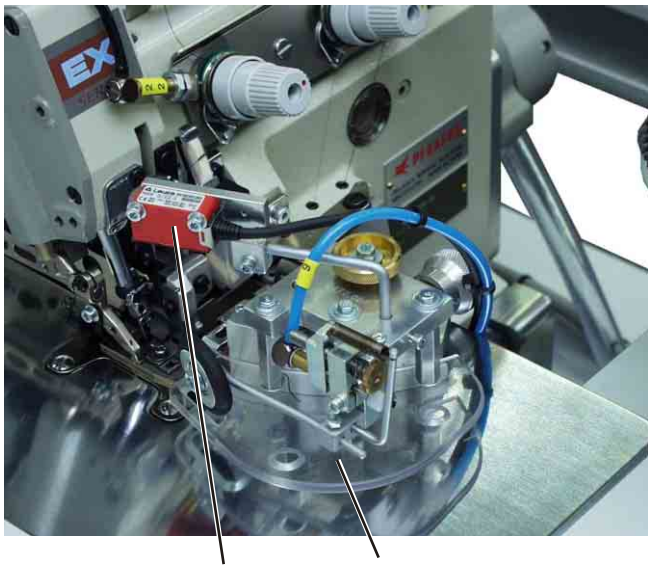

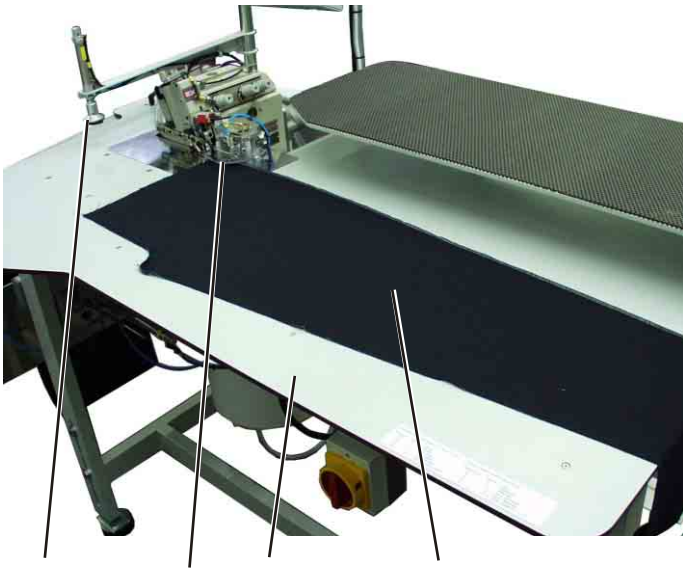

Feeding the trousers part and starting the sewing process

1) Select the seam program at the control panel (see chapter 6.3).
2) Position the trousers part 1 from the right on the table top 2 and under the contour guide 3.

ATTENTION!

As soon as the trousers part is pushed under the light barrier 5, the sewing process starts automatically and the contour guide 3 lowers.

3) The trousers part is sewn.
4) As soon as the workpiece has left the light barrier 5, the seam is finished and the stamp 4 lowers.
5) The contour guide 3 moves upward.
6) The stacker clamp moves to the front.
7) The stamp 4 moves upward again.
8) The trousers part is stacked with an air blast.

5.2 Adjusting the edge guide

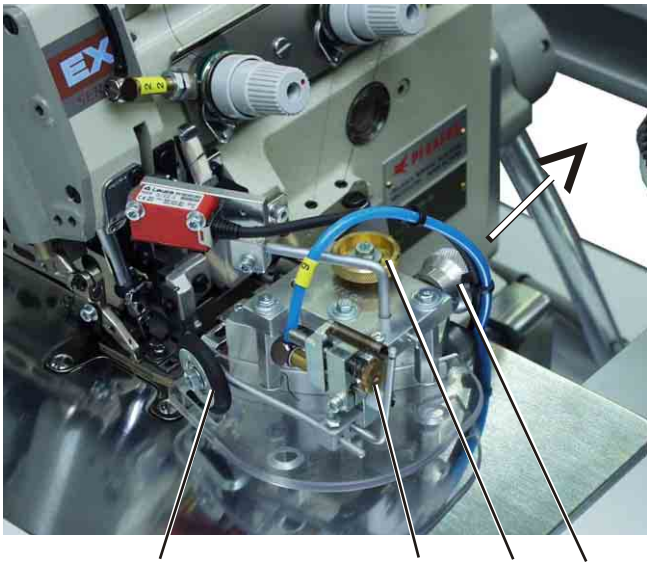

The height-adjustable edge guide ensures a precise positioning of the trousers part in front of the sewing head. The height of the edge guide can be adjusted according to the thickness of the material to be sewn.

The draw roll 3 guarantees that the workpiece is precisely guided under the sewing foot.

Adjusting the height of the edge guide

– Draw dial 1 in the direction of arrow.
– Set dial 1 on one of the four lock-in positions.
  Position 1 = minimum height
  Position 4 = maximum height

Fine adjustment of the height of the edge guide

– Turn dial 2 correspondingly.

Setting the contact pressure of roller 4

– Turn dial 3 in clockwise direction
  The contact pressure of the roller is increased
– Turn dial 3 counter-clockwise
  The contact pressure of the roller is reduced

5.3 Adjusting the blowing air for the nozzles in the table top

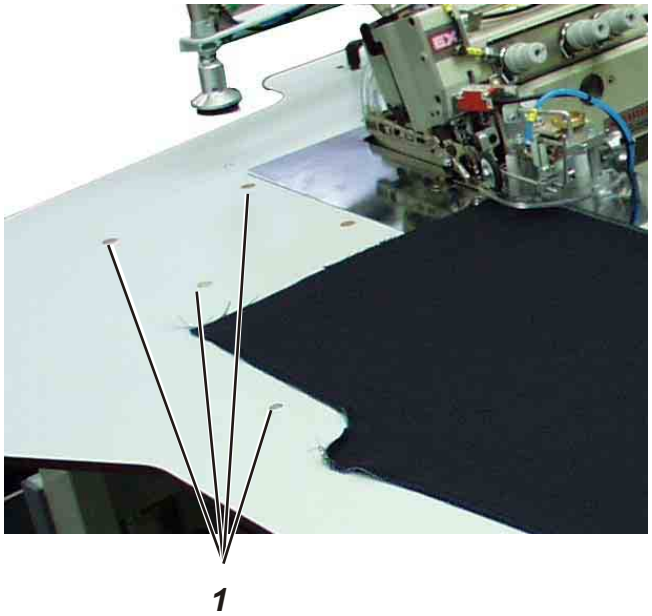

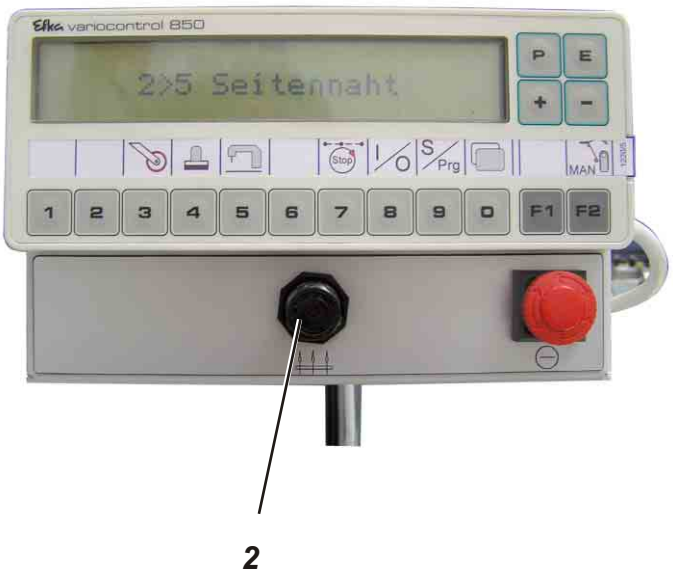

The blowing nozzles 1 in the table top support the precise stacking of the workpieces.

– Set the intensity of the air blast by dial 2 at the control panel.
  Turn the dial to the right = increased intensity of air blast
  Turn the dial to the left = reduced intensity of air blast

5.4 Setting the guide blade

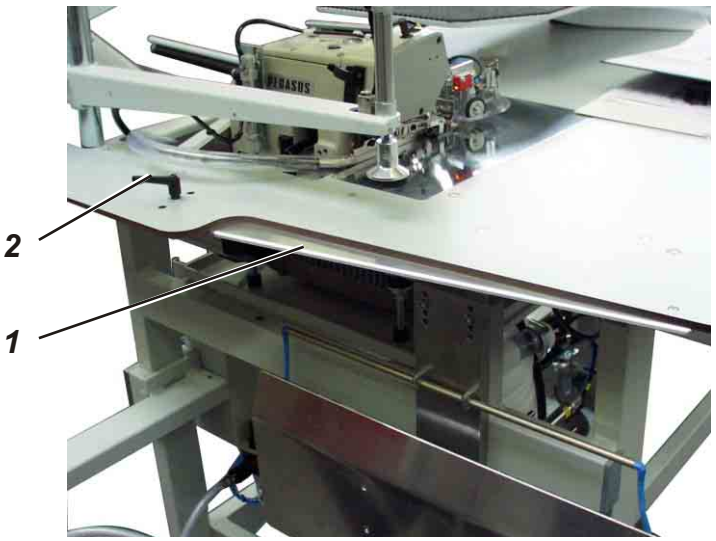

By means of the guide blade 1 the run of the workpiece can be influenced.

– Release lever 2.
– Pull the guide blade 1 out or push it in.
– Tighten lever 2.

6. Operation of the control

6.1 Operator terminal

For the input and output of data an operator terminal with an LCD display and function keys is used.

Key		Function
1 —	0	Seam program 1 to program 20
	F2	Manual stacking
	P	Menu selection/ Data storage
P	3	Set function auxiliary roller
P	4	Set function holding stamp
P	5	Set machine parameters
P	7	Key sewing stop in the seam
P	8	Input/ Output test
P	9	Sequence programming (S) Program creation (Prg)
P	0	Set global parameters
	E	Enter key
F1	F2	Select parameters / scroll
-	+	Alter parameter values

6.2 User interface

6.2.1 Menu structure of the sewing and setting programs

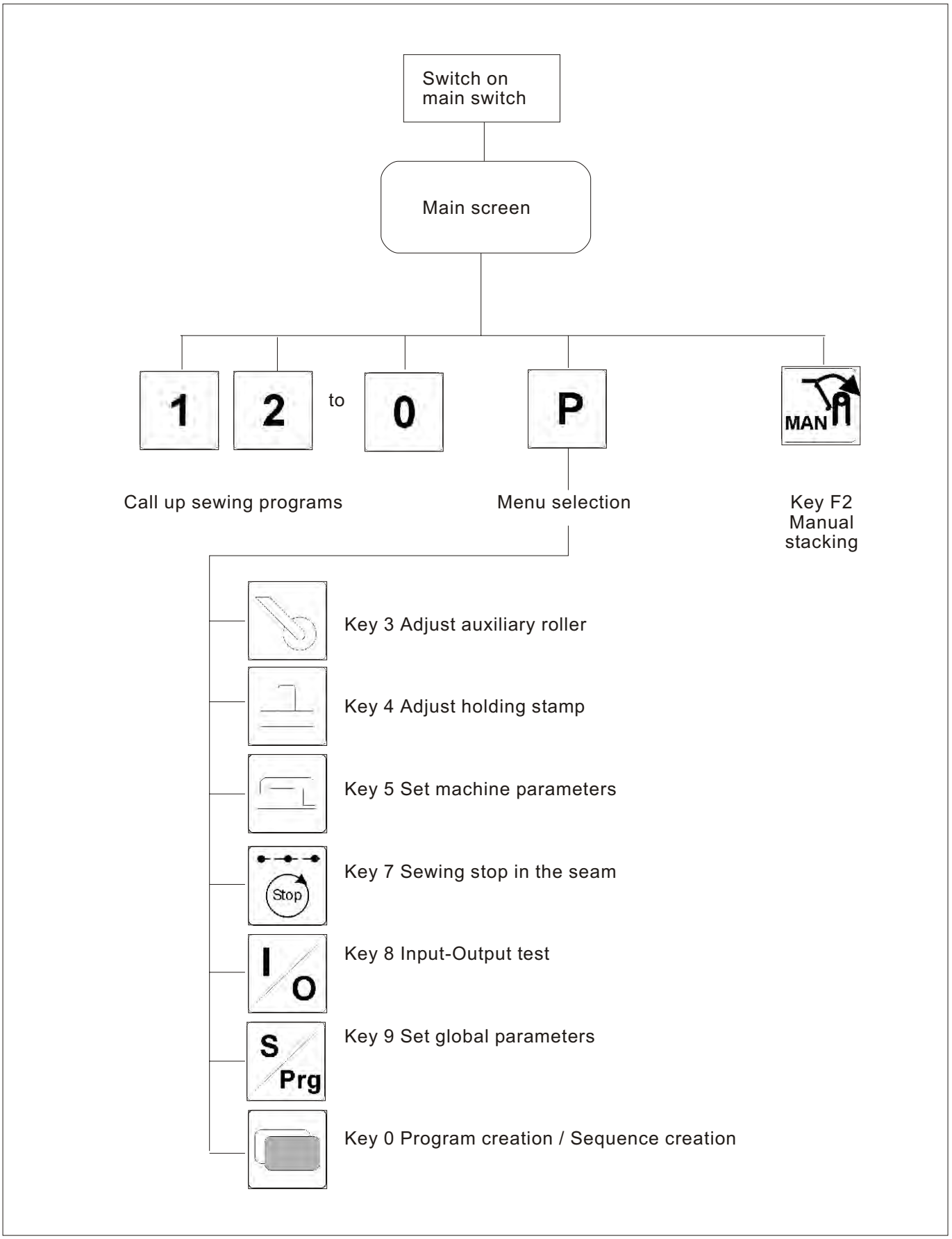

Calling up sewing programs

– Switch the main switch on.
  The control initializes.
  The seam program previously used is loaded.
– Press one of the keys “1, 2, 3, 4, 5, 6, 7, 8, 9, 0”.
  The selected seam program is loaded.

Calling up the parameter menu

– Switch the main switch on.
  The control initializes.
  The previously used program appears in the display.
– Press key “**P**”.
  The selection menu is called up.
– Press one of the keys “1, 2, 3, 4, 5, 6, 7, 8, 9, 0”.
  The display changes over to the corresponding function.

Manual stacking

When the seam program is selected:

– Press key “**F2**”.
  The stacker makes a stacking movement.

6.3 Seam programs

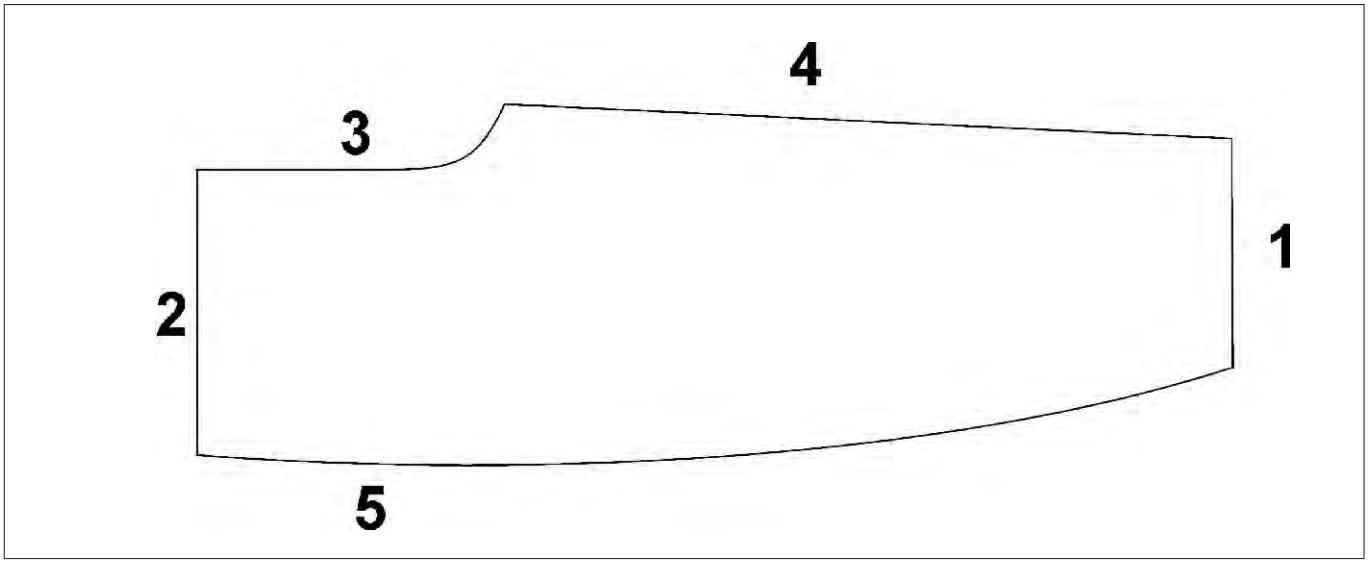

Designation of the individual seams:

1 = hem
2 = waistband
3 = fly seam or seat seam
4 = crotch seam
5 = side seam

The sewing unit 1220-6 is delivered with 5 standard seam programs:

Program	Description
001	Sew crotch seam (4)
002	Sew side seam (5)
003	Sew hem (1) with joining crotch seam (4)
004	Sew hem (1) with joining side seam (5)
005	Sew hem (1) and seat seam (3) with joining crotch seam (4)

A seam program in the display of the control panel

Program No. Seam No.

6.4 Adjusting the control

The parameter values are altered in the individual parameter menus.

- Press key “**P**”.
- Select the menu item.
- Select the parameter to be altered with the keys “**F1**” or “**F2**”.
- Press key “**E**”.
- Alter the parameter value with the keys “**Plus**” or “**Minus**”.
- Press key “**P**”.
  The new parameter value is stored.
- Press key “**P**”.
  You return to the selection menu
- Press key “**P**”.
  You return to the sewing program

6.4.1 Altering seam-specific parameters

Auxiliary roller

Via this parameter the auxiliary roller is adjusted.

Parameter 13:	Number of stitches when the auxiliary roller lowers.
Setting range:	0 …400 stitches
Parameter 14:	Number of stitches how long the auxiliary roller remains lowered.
Setting range:	0 …300 stitches

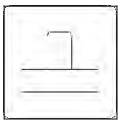

Adjusting the holding stamp

Via this parameter the holding stamp is adjusted.

Parameter 15:	Number of stitches when the stamp lowers.
Setting range:	0 …20 stitches
Parameter 16:	Number of stitches how long the warp separator remains switched on.
Setting range:	0 …100 stitches
Parameter 17:	Switch the stacker on or off
Setting range:	0 … 2000
Parameter 57:	Time how long the holding stamp is down.
Setting range:	0 / 1

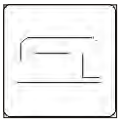

Altering the machine parameters

Parameter 30: Set the main speed
Setting range: 0 …7000

Parameter 31: Switch manual sewing on or off
Setting range: 0 / 1

Parameter 32: Time how long the table blowing remains switched on
Setting range: 0 …400 stitches

Parameter 44: Number of stitches until the contour guide lowers
Input: 0 …200

Parameter 60: Softstart speed

Setting range: 500 …5000

Parameter 61: Switch the softstart on or off
Setting range: 0 / 1

Parameter 62: Softstart speed
Setting range: 1 ...5000

Parameter 76: Switch the start via light barrier on or off
Setting range: 0 / 1

Parameter 77: Switch the autostart on or off
Setting range: 0 / 1

Parameter 78: Number of stitches when the autostart starts
Setting range: 0 ...400 stitches

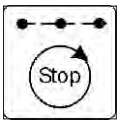

Altering the seam lines

Via this parameter the parameters for the individual seam lines are set.

Parameter 81: Length of seam line 1
Setting range: 0 …00

Parameter 82: Switch the speed reduction in seam line 1 on or off
Setting range: 0 / 1

Parameter 83: Reduce the speed in seam line 1
Setting range: 0 …7000

Parameter 84: Switch the stop within the seam on or off
Setting range: 0 / 1

Parameter 85: Switch the sewing foot lift within the seam on or off
Setting range: 0 / 1

Parameter 86: Seam line 2
to
Parameter 90 Values see seam line 1

Parameter 91: Seam line 3
to
Parameter 95 Values see seam line 1

6.4.2 Altering the global parameters

Parameter 45:	Number of stitches until the table blowing is switched on
Input:	0 …200
Parameter 46:	Duration of the stacker impulse
Input:	0 ..2000
Parameter 47:	Time of stacker movement
Input:	0 …2000
Parameter 48:	Speed limitation
Input:	max. 7000
Parameter 49:	Speed at warp separation
Input:	0 …5000
Parameter 50:	Number of stitches until the thread tension is opened (seam end)
Input:	0….50
Parameter 56:	Seam programming on/ off On = Determine the seam sequences in the current program Off = Create the next free program with seams
Input:	0 and 1
Parameter 58:	Display of the software version
Parameter 59:	Number of stitches how long the seam chain is sucked (seam beginning)
Input:	0 …150

6.4.3 Input - Output test

Via the input - output test the different input and output elements can be checked.

Input test

- Press key “**P**”.
- Press key “**8**”.
- Actuate the corresponding input.
  Example:
  Cover the light barrier.
- Press key “**Program stop**”.
  The program is quitted.

Input elements	
Switch	**Designation**
01	Light barrier 01
05	Switch “Program stop”

Output test

- Press key “**P**”.
- Press key “**8**”.
- Press key “**Plus**”.
- Select the output element to be tested with the keys “**Plus**” or “**Minus**”.
- Switch the output on or off with the key “F2”.
- Press key “**Program stop**”.
  The program is quitted.

Output elements	
Switch	**Designation**
Y01	Sewing foot up / down
Y02	Thread tension lift open / closed
Y03	Contour guide up / down
Y04	Stacker off / on
Y05	Holding stamp up / down
Y06	Auxiliary roller up / down
Y12	Warp separator off / on
Y13	Table blowing off / on
Y14	Dirt suction off / on

6.4.4 Creation of seam programs

Note

Before a new seam program can be created or an existing one can be deleted, the global parameter “56” has to be set to the value “0”.
This avoids that the existing programs are changed inadvertently.

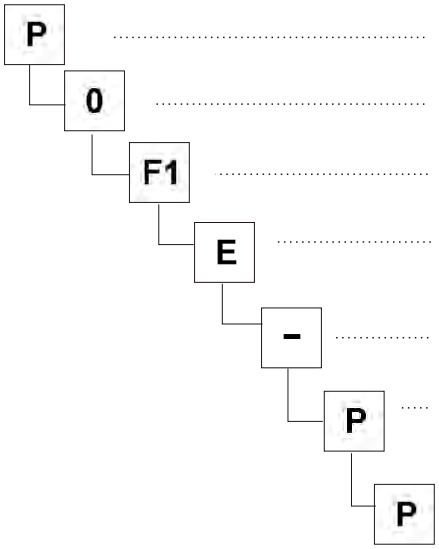

– Press key “**P**”.

– Press key “**0**” (global parameters).

– Change over to parameter 56 with key “**F1**”.

– Press key “**E**”.
The parameter 56 is selected.

– Set the parameter value to “0" with key “**Minus**.

– Press key “**P**”.
The new parameter value is stored.

– Press key “**P**”.
You return to the selection menu.

Creating a seam program

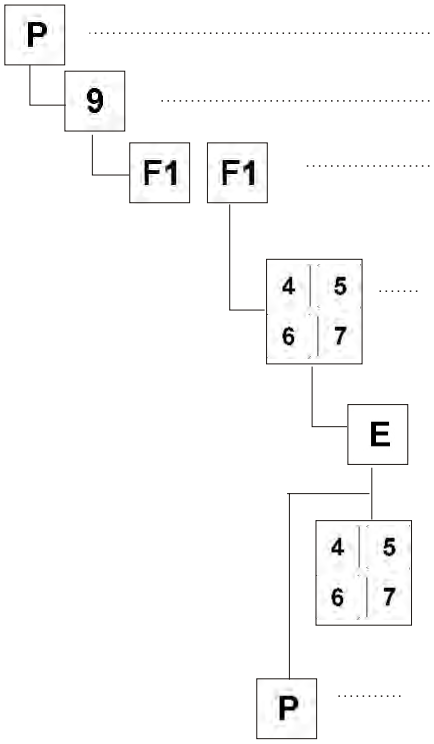

– Press key “**P**”.

– Press key “**9**” (Prg = programs).

– Press key “**F1**” twice.

– Select a seam with one of the keys “**1**” to “**9**”.

– Press key “**E**”.
The selected seam is taken over.

– Select a further seam with one of the keys “**1**” to “**9**”.

or

– Press key “**P**”.
The new setting is stored and you return to the selection menu.

Note

After the creation of a new seam program the parameter “56" has to be reset to the value “1” for safety reasons.

6.4.5 Deleting a seam program

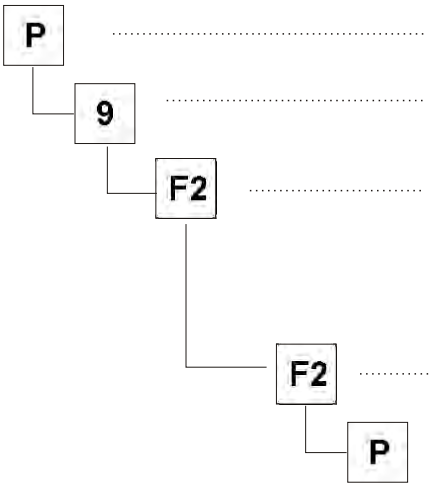

– Press key “**P**”.

– Press key “**9**”.

– Press key “**F2**”.
The display indicates:

DELETE?

– Press key “**F2**” anew.
The program is deleted.

– Press key “**P**”.
You return to the selection menu.

6.4.6 Altering seam programs (Changing / Completing the sequence)

Note

Before a seam program can be altered,the parameter “56” has to be set to the value “1".
This avoids that the existing programs are deleted inadvertently. (see chapter 6.4.3, paragraph 1)

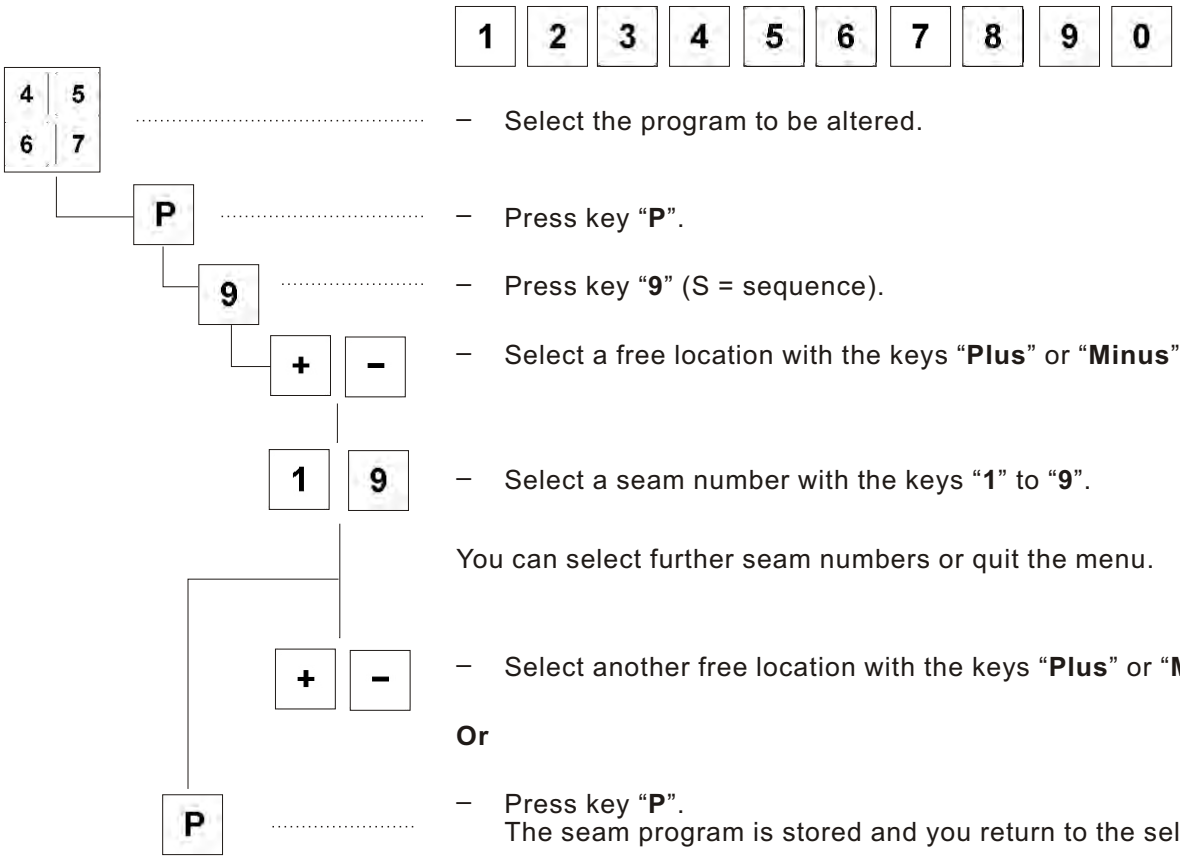

– Select the program to be altered.

– Press key “**P**”.

– Press key “**9**” (S = sequence).

– Select a free location with the keys “**Plus**” or “**Minus**”.

– Select a seam number with the keys “**1**” to “**9**”.

You can select further seam numbers or quit the menu.

– Select another free location with the keys “**Plus**” or “**Minus**”.

Or

– Press key “**P**”.
The seam program is stored and you return to the selection menu.

7. Error messages

In case of an error in the control system or in the machine program corresponding error messages are indicated in the display.

Display	Meaning
Error 1	One of the parameters “18” or “19” is switched on (value = 1)
Error 2	Both parameters “18” and “19” are switched on (value = 1)
Error 3	In the current program the last existing seam was to be deleted.
Errors of free programming	
Info U1	FP custom code wrong, e.g. describing a parameter which does not exist.
Info U2	Wrong system function
Info U3	Wrong in / out number
Info U4	Too many user variables
Info U5	Too many system variables
Info U6	Not enough storage location for the user program
Info U7	Wrong or undefined key in the Vario
Info U8	Unknown device address
Info U9	Fatal exception error
Errors and informations bootload	
Info B1	Switch on control in the boot mode and press key “F2”
Info B2	Programming of segment number
Info B3	Flash programming failed
Info B4	Flash programming okay

8. USB stick

8.1 General notes

The USB stick 1 serves for storing and transferring of the sewing unit software.

By means of the USB stick program and parameter data can also be transferred to other sewing units.

Commercially available USB 1 sticks can be used, too.

8.2 Formatting the USB stick

Before using a new USB stick this has to be formatted correspondingly.

The file format is the **"FAT 16"** system.

– Format the USB stick with the FAT 16 system via a PC.

8.3 Plugging the USB stick in the control

– Switch the main switch off.

– Plug the USB stick 1 in the lower slot of the Efka control.

P ..... – Press key "**P**" and keep it pressed.

P ..... – Switch the main switch on.
The message appears for a moment.

USB. DEV. DETECT:

P ..... – Keep key "**P**" pressed until the following message appears in the display:

SERVICE - CODE

3 1 1 2 ..... – Enter CODE 3112.

E – Press key "**E**".

8.4 USB functions

The following functions can be carried out with a USB stick:

1) Storing and loading of global parameters
File extension = *. PAR

Parameter	Function
F-510	Securing from the control on the USB stick
F-511	Loading from the USB stick in the control
F-512	Comparing USB stick and control data
F-513	Deleting data from the USB stick

2) Storing and loading of programs and seam parameters
File extension = *.PAY

Parameter	Function
F-514	Securing from the control on the USB stick
F-515	Loading from the USB stick in the control
F-516	Comparing USB stick and control data
F-517	Deleting data from the USB stick

3) Loading a new software version
File extension = *.PRG

Parameter	Function
F-523	Load a new software version from the USB stick in the control

By means of the FAT 16 file system the control allocates file names with max. 8 characters.

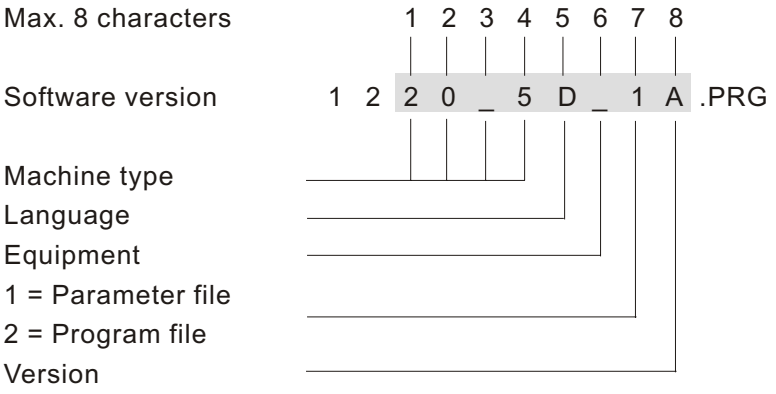

If different program or parameter files are stored, the control allocates a new name each.

Example:

Storing of different parameter data

1st file	0100DATA.PAR
2nd file	0101DATA.PAR
etc.	

The files can individually be renamed by the file manager or explorer on a PC.

Note

On principle, the Efka control can read data from the main level of the USB stick only. Data from subdirectories cannot be processed.

8.4.1 Storing data on the USB stick

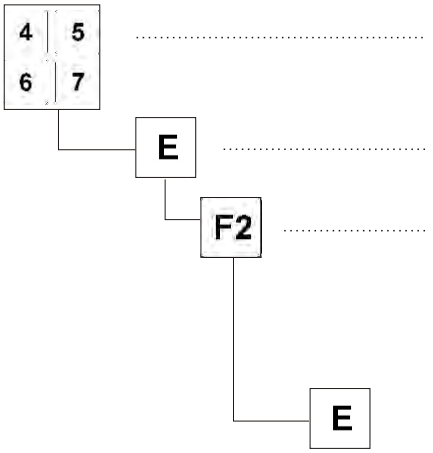

– Enter parameter.
Example: 510

– Press key “**E**”
The cursor flashes.

– Press key “**F2**”.
The file name chosen by the control appears.
Example

0100DATA.PAR

– Press key “**E**”.
The data are written on the USB stick.

Note

The file name is allocated automatically.

8.4.2 Loading data from the USB stick

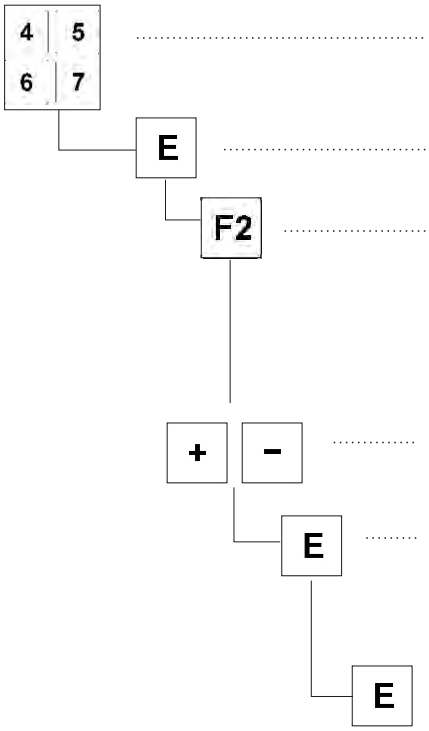

– Enter parameter.
Example: 511

– Press key “**E**”
The cursor flashes.

– Press key “**F2**”.
The name of the first file stored on the stick appears.
Example

0100DATA.PAR

– Select the desired file with the keys “**+**” or “**-**”.

– Press key “**E**”.
The message appears.

READ DATA YES = E

– Press key “**E**” within 2 seconds.
The data are read from the USB stick.

8.4.3 Data comparison

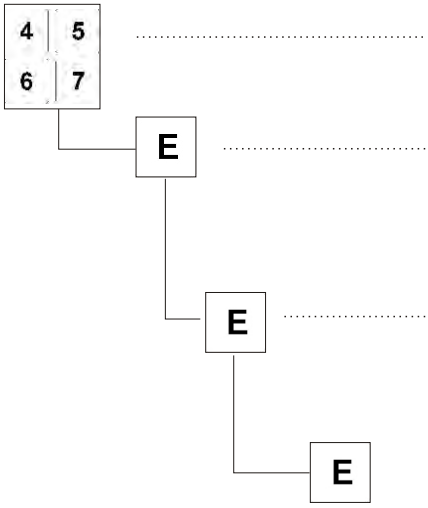

– Enter parameter.
Example: 512

– Press key “**E**”.
The file name chosen by the control appears.
Example

0100DATA.PAR

– Press key “**E**”.
The message appears.

READ DATA YES = E

– Press key “**E**” within 2 seconds.
The data of the USB stick and the control are compared.
The message appears.

READ DATA

Possible displays

DATA OK	The data on the stick are identical with the data of the control
DATA DIFFERENT	The data of the stick and the control are not identical.

8.4.4 Deleting data from the USB stick

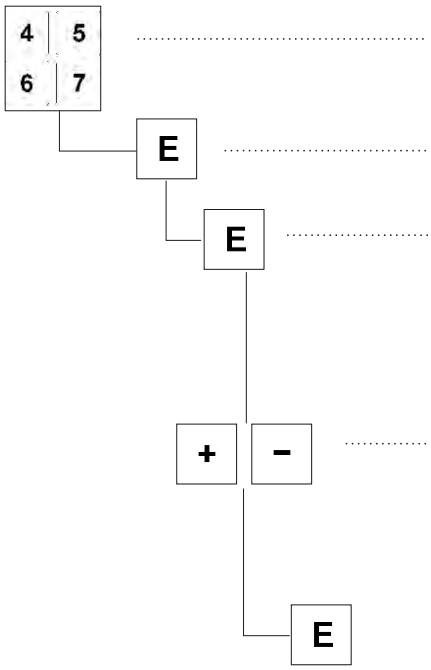

– Enter parameter.
Example: 513

– Press key “**E**”.
The cursor flashes.

– Press key “**F2**”.
The name of the first file appears on the stick.
Example

0100DATA.PAR

– Select the desired file with the keys “**+**” or “**-**”.
Example

0105DATA.PAR

– Press key “**E**” within 2 seconds.
The data from the USB stick are deleted.
The message appears.

READY

8.4.5 Loading software version from the USB stick

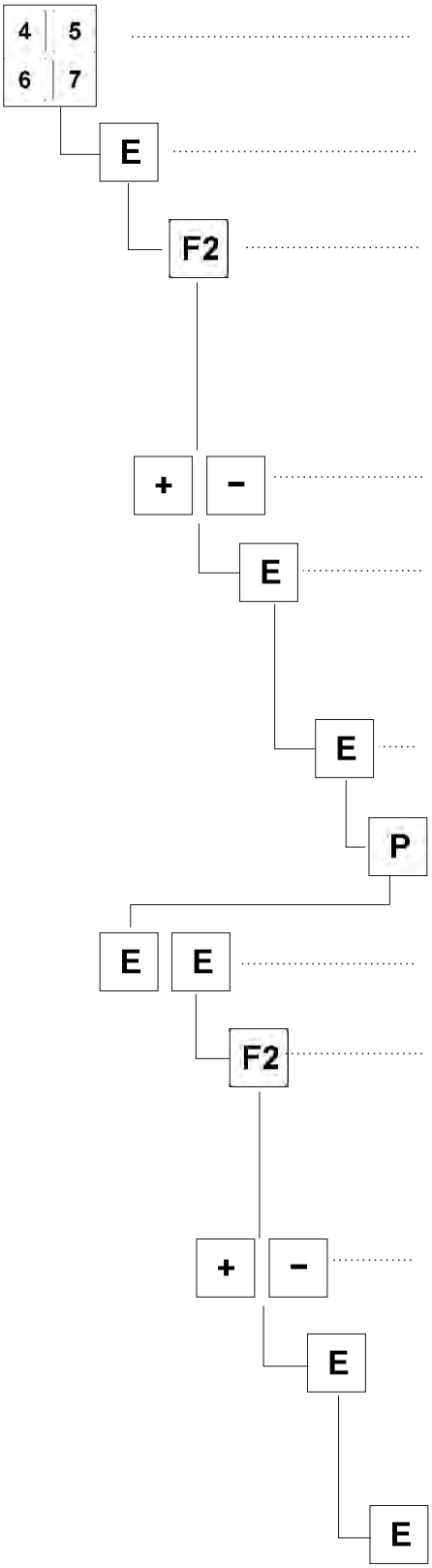

– Enter parameter 523.

– Press key “**E**”.
The cursor flashes.

– Press key “**F2**”.
The name of the first file stored on the stick appears.
Example

20_5D_1A.PRG

– Select the desired parameter file with the keys “**+**” or “**-**”.

– Press key “**E**”.
The message appears.

READ DATA	YES = E

– Press key “**E**” within 2 seconds.
The data are read from the USB stick.

– Press key “**P**” and wait approx. 3 seconds until “Save Data” fades out.

– Press key “**E**” twice.
The cursor flashes.

– Press key “**F2**”.
The name of the first file stored on the stick appears.

Example

20_5D_2A.PRG

– Select the desired program file with the keys “**+**” or “**-**”.

– Press key “**E**”.
The message appears.

READ DATA	YES = E

– Press key “**E**” within 2 seconds.
The data are read from the USB stick.

– Switch the main switch off and on again.
The new software version is loaded now.

8.5 Removing the USB stick

- Switch the main switch off.
- Pull the USB stick 1 out of the slot of the Efka control.

9. Maintenance

9.1 Cleaning and checking

Caution: Risk of injury !

Switch the main switch off.
The maintenance of the sewing unit must only be carried out with the machine switched off.

Maintenance work has to be done after the intervals indicated in the tables at the latest (see column “Operating hours”).

The processing of fluffy material may require shorter maintenance intervals.

A clean sewing unit protects from disturbances.

1

2

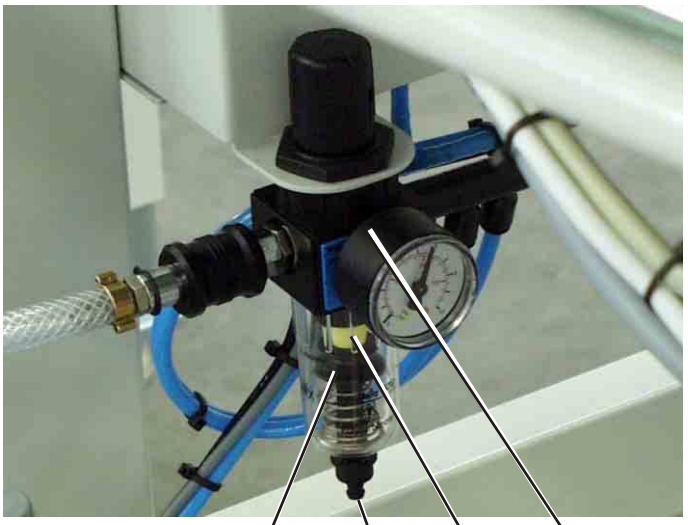

6 *5* *4* *3*

Maintenance work to be done	Explanation	Operating hours
Machine head		
- Remove sewing dust and thread remainders. (e.g. with compressed air pistol)	Clean the entire area 1 of the thread guides under the fabric sliding sheet	8
Suction device	Empty container 2 of the suction device - Turn the bottom part of the container to the left and remove it - Empty the container - Screw the bottom part on again in clockwise direction	8
Pneumatic system		
- Check the water level in the pressure regulator 3	The water level must not rise up to the filter insert 4. - Let the water run out of the water separator under pressure after pressing the drain plug 5.	40
- Clean the filter insert 4	The filter insert 4 separates dirt and condensed water. - Separate the sewing unit from the compressed air net. - Push in drain plug 5. The pneumatic system of the sewing unit has to be pressureless. - Screw the water separator 6 off - Remove filter insert 4. Wash the dirty filter tray and the filter insert with benzine (no solvent!) and blow them clean. - Reassemble the water separator and connect the maintenance unit.	500
- Make leak test of the system		500

9.2 Oil lubrication

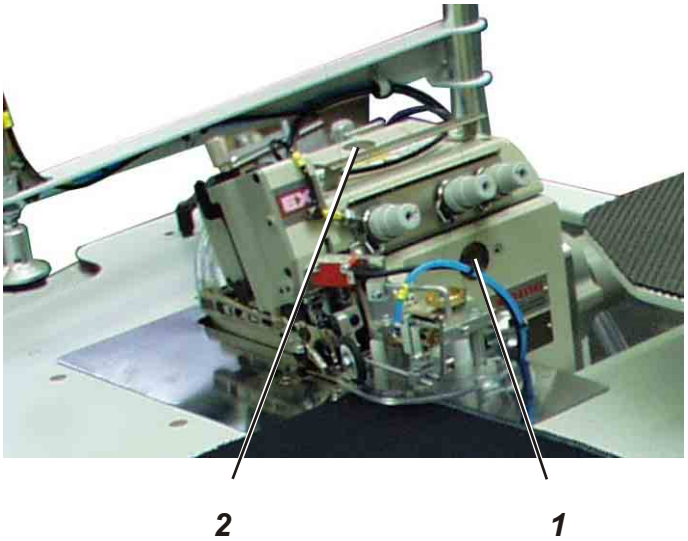

Caution: Risk of injury !

Oil may cause skin eruption.
Avoid a longer contact with the skin.
Wash yourself thoroughly after a contact.

ATTENTION !

The handling and disposal of mineral oils is subject to legal regulations.
Deliver used oil to an authorized collecting station.
Conserve your environment.
Be careful not to spill any oil.

Oil the head of the sewing unit exclusively with lubricating oil **DA-10** or an equivalent oil with the following specification:

– Viscosity at 40° C: 10 mm²/s
– Ignition point: 150° C

DA-10 can be bought at the sales points of **DÜRKOPP ADLER AG** under the following parts numbers:

Container 250 ml: 9047 000011
Container 1 litre: 9047 000012
Container 2 litres: 9047 000013
Container 5 litres: 9047 000014

Maintenance work to be done	Explanation	Operating hours
Lubrication	Check the oil level at the sewing machine head regularly (inspection glass 1 and 2). Please take further details from the enclosed operating instructions of the sewing machine head.	8

Note:

Index **Page:**

Part 2: Assembly instructions cl. 1220-6

1. Scope of delivery 3

2. General notes 3

3. Installing the sewing unit
3.1 Transport protections 4
3.2 Setting the working height 4
3.3 Mounting the thread reel holder 5
3.4 Aligning the control panel 5

4. Electrical connection
4.1 Checking the nominal voltage 6
4.2 Making the mains connection 6

5. Pneumatic connection 7

6. Putting into operation
6.1 Sewing test 8

1
2
3
4
5
6
7

1. Scope of delivery

The scope of delivery **depends on your order**.
The sewing unit consists of:

- **1** Sewing machine head (as per order)
- **2** Thread reel holder
- **3** Control with control panel
- **4** Material tray
- **5** Stand and table top
- **6** Suction unit with suction container
- **7** Stacker
- Compressed air maintenance unit

2. General notes

ATTENTION !

The sewing unit must only be installed by trained specialist staff.

Any work on the electrical equipment of the sewing unit must only be carried out by electricians or correspondingly instructed persons.
The mains plug must be pulled out.

The enclosed operating instructions of the drive motor manufacturer have to be observed.

3. Installing the sewing unit

3.1 Transport protections

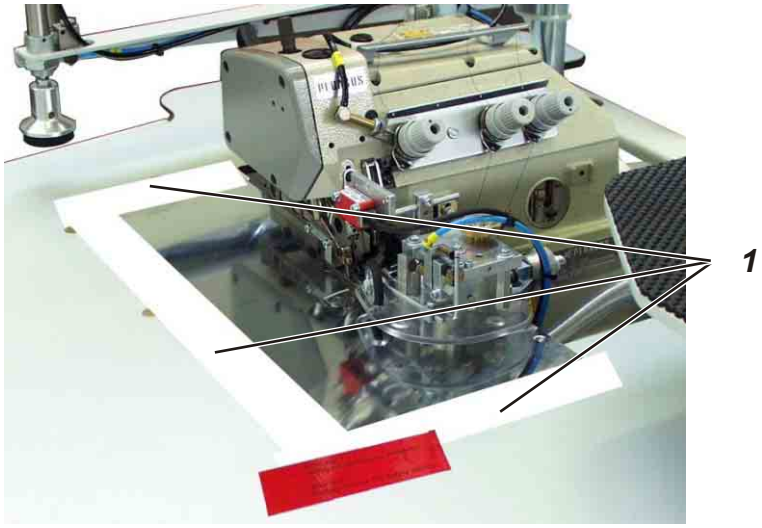

Before the installation of the sewing unit all transport protections have to be removed.

- Remove the security tapes at the thread reel holder, machine table etc.
- Remove the protective foils 1.

3.2 Setting the working height

The working height is adjustable between 850 and 1200 mm (measured up to the top edge of the table top).

- Loosen screws 1 and 2 at the spars.
- Set the desired working height with the help of suitable auxiliary means.
  In order to avoid jamming lift the table top equally on both sides.
- Retighten screws 1 and 2 at the spars.

3.3 Mounting the thread reel holder

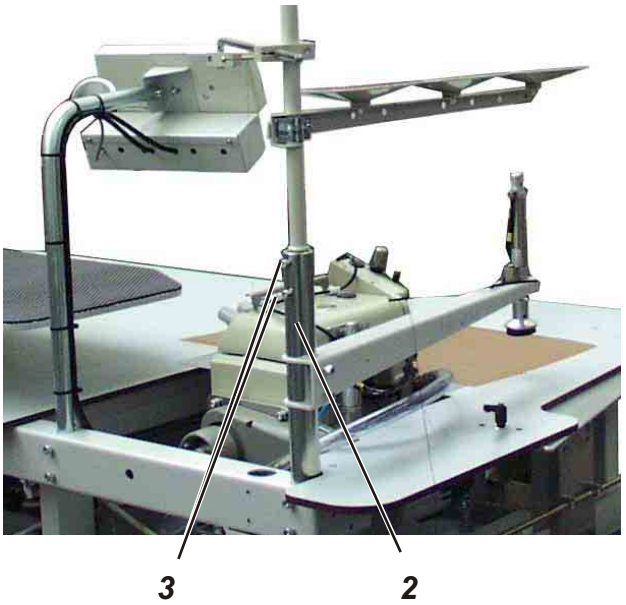

- Insert thread reel holder 1 in retainer 2.
- Tighten the thread reel holder with the two screws 3.

3.4 Aligning the control panel

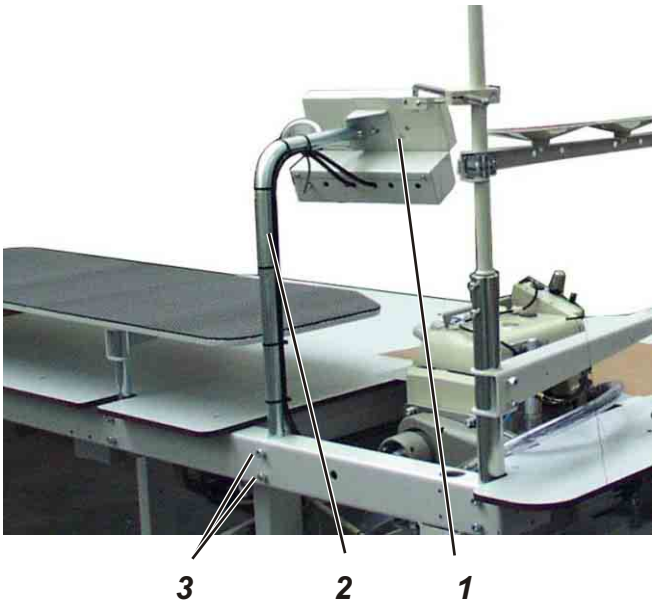

The control panel 1 has been lowered for transportation.

- Loosen screws 3.
- Pull tube 2 holding the control panel right to the top.
- Retighten screws 3.

4. Electrical connection

ATTENTION !

Any work on the electrical equipment of the sewing unit must only be carried out by electricians or correspondingly instructed persons.
The mains plug must be pulled out.

4.1 Checking the nominal voltage

ATTENTION !

The nominal voltage indicated on the type plate of the sewing machine control and the mains voltage must correspond.

Nominal voltage = 190 - 240 V, 50/60 Hz

4.2 Making the mains connection

– Connect the mains plug.

5. Pneumatic connection

For the operation of the pneumatic components the sewing unit has to be provided with anhydrous compressed air.

ATTENTION!

For a trouble-free function of the pneumatic control processes the compressed air net has to be rated as follows:

Even in the moment of maximum air consumption the minimum operating pressure must not drop below **6 bar**.

In case of a too high air pressure decrease:

– Increase the compressor output.

– Increase the diameter of the compressed air supply line.

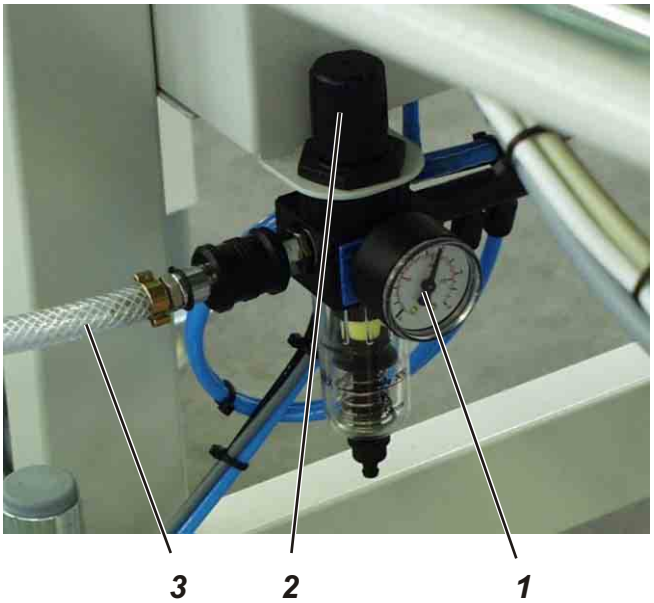

Connecting the compressed air maintenance unit

– Connect the connecting hose 3 to the compressed air net.

Setting the operating pressure

– The operating pressure amounts to 6 bar.
  It can be read off at the manometer 1.

– For setting the operating pressure pull up and turn the rotary handle 2.
  - Turn in clockwise direction = increase the pressure
  - Turn counter-clockwise = reduce the pressure

ATTENTION !

No oil-bearing compressed air must be fed from the compressed air net.

Behind the filter cleaned compressed air is withdrawn as blowing air for cleaning machine parts and for blowing workpieces out.
Oil particles contained in the blowing air lead to malfunction and stains on the workpieces.

6. Putting into operation

6.1 Sewing test

After completion of the installation work a sewing test should be made.

– Plug in the mains plug.

Caution: Risk of injury!

Switch the main switch off.

Thread in needle and hook thread only with the sewing unit switched off.

– Thread in needle and hook thread
  (see operating instructions of the sewing machine head).
– Switch the main switch on.
  The control is initialized.
– Select the sewing program.
– For feeding and operating see part 1:
  Operating instructions 1220-6

Index **Page:**

Part 3: Service instructions class 1220-6

1. General notes 3

2. Brief instructions for the sewing head
2.1 Adjusting the height of the needle bar 4
2.2 Adjusting the hook 5
2.2.1 Distance between left hook and needle. 5
2.2.2 Distance between right hook and needle. 7
2.3 Adjusting the needle protection 9
2.3.1 Hind needle protection. 9
2.3.2 Front needle protection 10
2.4 Adjusting the feed-dog. 11
2.4.1 Feed-dog position 11
2.4.2 Feed-dog height 12
2.5 Presser foot 13
2.5.2 Presser foot lift of head EX5204 13
2.5.2 Presser foot lift of head S52 14
2.5.2 Presser foot 15
2.6 Upper and lower knife 16
2.6.1 Changing and adjusting the upper knife 16
2.6.2 Changing and adjusting the lower knife 17
2.7 Thread regulation of overlock hook 18

3. Adjusting the sewing unit
3.1 Adjusting the light barrier 19
3.2 Direct sewing drive 20
3.2.1 Setting the reference. 20

4. Oil lubrication
4.1 Oil change and oil filter change 21

5. Maintenance 22

1. General notes

The service instructions on hand describe the adjustment of the single-head overlock unit 1220-6.

The manual consists of:

- Brief instructions for the sewing head
- Service instructions for the sewing unit

ATTENTION !

The brief instructions are a summary of the detailed operating instructions of the sewing head. In any case these operating instructions have to be carefully read and all regulations have to be observed. The Beisler company does not guarantee the accuracy of the following specifications.

ATTENTION !

The operations described in the service instructions must only be executed by qualified staff or correspondingly instructed persons respectively!

Caution: Risk of injury !

In case of repair, alteration or maintenance work switch the main switch off.

Carry out adjusting operations and functional tests of the running machine only under observation of all safety measures and with utmost caution.

The instruction manual on hand describes the adjustment of the sewing unit in an appropriate sequence.
Please observe in this connection that various setting positions are interdependent.
Therefore it is absolutely necessary to do the adjustment following the described order.

For all setting operations of parts involved in the stitch formation a new needle without damage has to be inserted.

2. Brief instructions for the sewing head

2.1 Adjusting the height of the needle bar

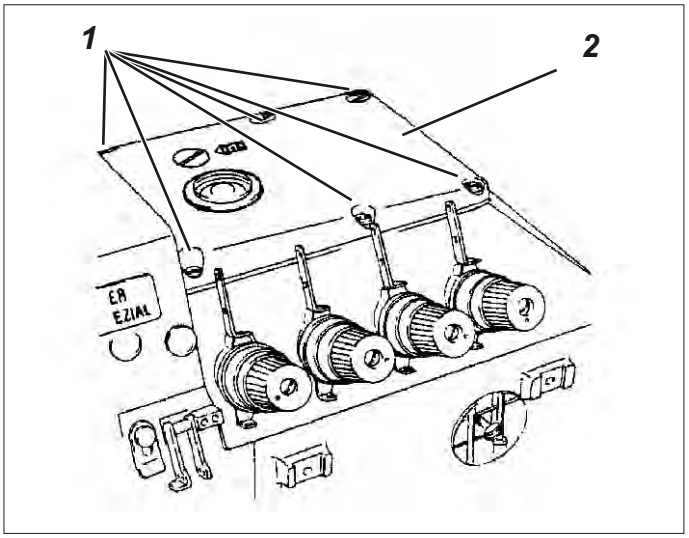

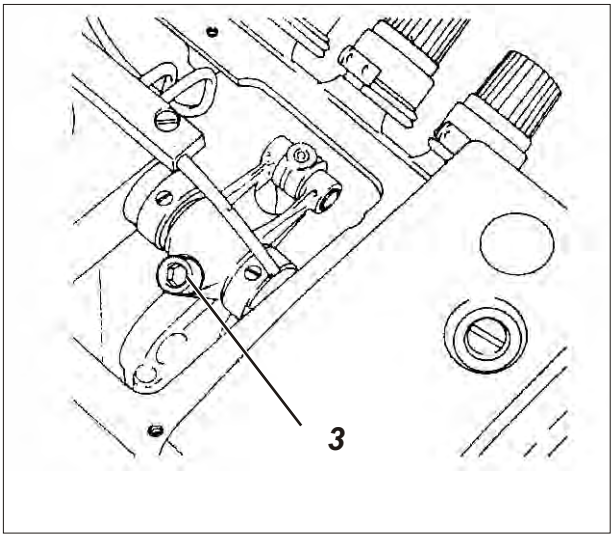

Caution: Risk of injury!

Switch the main switch off.

Check and adjust the height of the needle bar only with the sewing unit switched off.

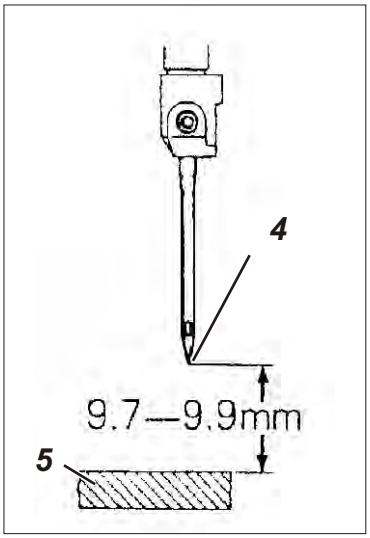

Standard checking

In the top dead centre of the needle bar the distance between the needlepoint 4 and the throat plate should amount to 9.7 - 9.9 mm.

- Move the needle bar in its top dead centre.
- Check whether the distance between needlepoint 4 and throat plate 5 amounts to 9.7 - 9.9 mm.

Correction

- Unscrew screws 1 and remove cover 2.
- Move the needle bar in its top dead centre.
- Swivel the sewing foot out.
- Loosen screw 3 until the needle bar can just be pushed.
- Shift the needle bar in such a way that the distance between needlepoint 4 and throat plate amounts to 9.7 - 9.9 mm.
- Tighten screw 3.
- Screw cover 2 on again.

2.2 Adjusting the hook

2.2.1 Distance between left hook and needle

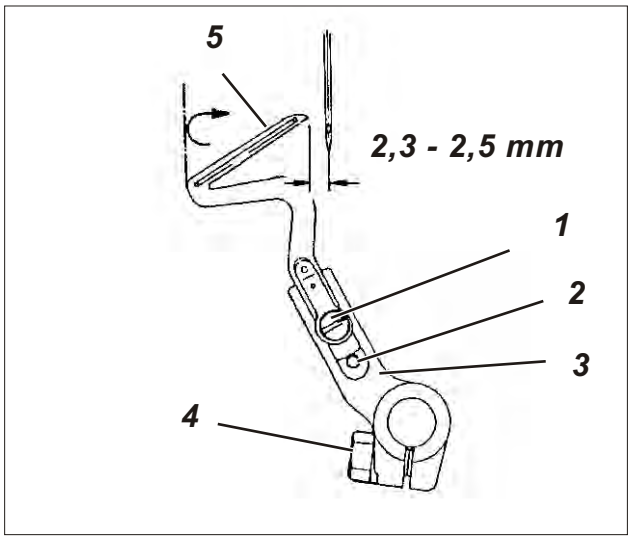

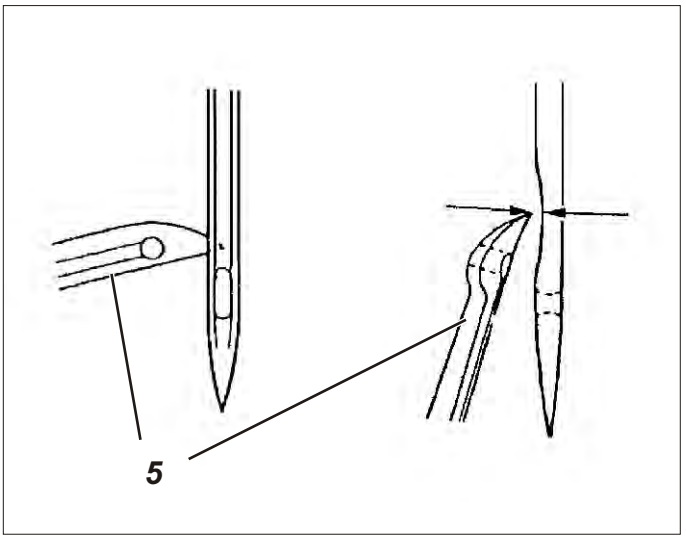

Caution: Risk of injury!
Switch the main switch off.
Check and adjust the hook only with the sewing unit switched off.

Cross-line adjustment

Standard checking

In the left reverse point of hook 5 the distance between the middle of the needle and the hook tip should amount to 2.3 - 2.5 mm.

- Move the **left** hook in its **left** reverse point by handwheel.
- Check whether the distance between the middle of the needle and the hook tip amounts to 2.3 - 2.5 mm.

Correction

- Unscrew the throat plate, the front feed-dog as well as the front and hind needle protection.
- Move the hook in its left reverse point by handwheel.
- Loosen screw 1 and take care that the hook abuts on stop 2.
- Tighten screw 1 again.
- Loosen screw 4 until the hook support 3 can just be turned.
- Turn the hook support in such a way that the distance between the middle of the needle and the hook tip amounts to 2.3 - 2.5 mm.

Note

Do not yet tighten screw 4.

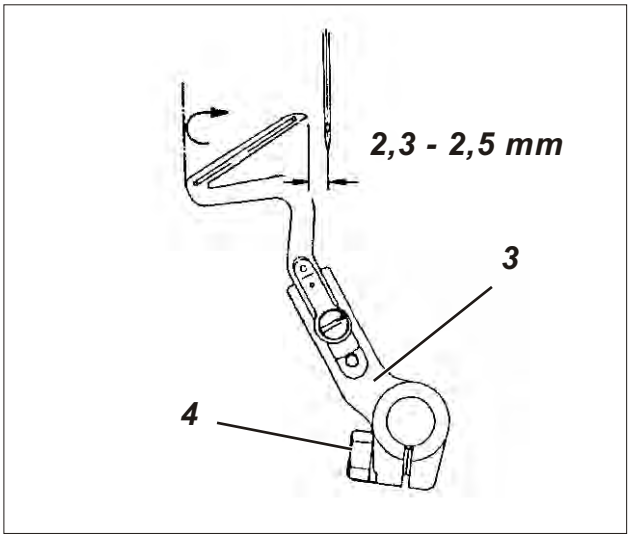

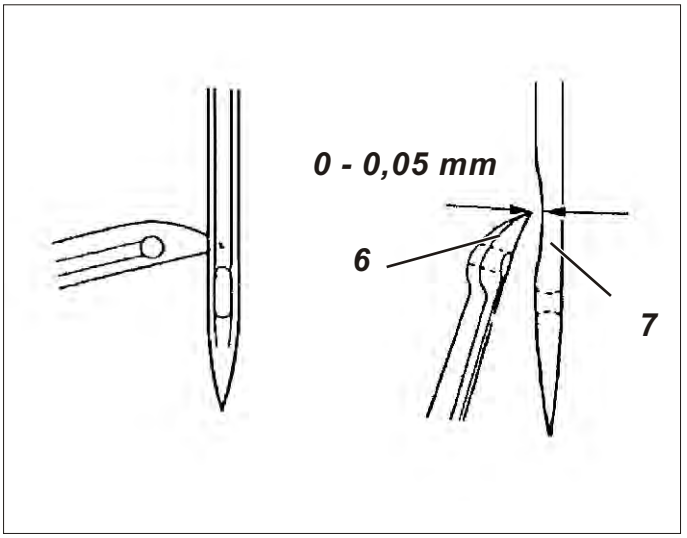

Adjustment in sewing direction

Standard checking

The distance between hook tip 6 and needle 7 should amount to 0.0 - 0.05 mm.

- Turn handwheel in direction of rotation until the hook tip is exactly at the level of the middle of the needle.
- Shift the hook support 3 in such a way that the distance between hook support and needle amounts to 0.0 - 0.05 mm.
- Check the cross-line adjustment once again and readjust, if necessary.
- Tighten screw 4.

2.2.2 Distance between right hook and needle

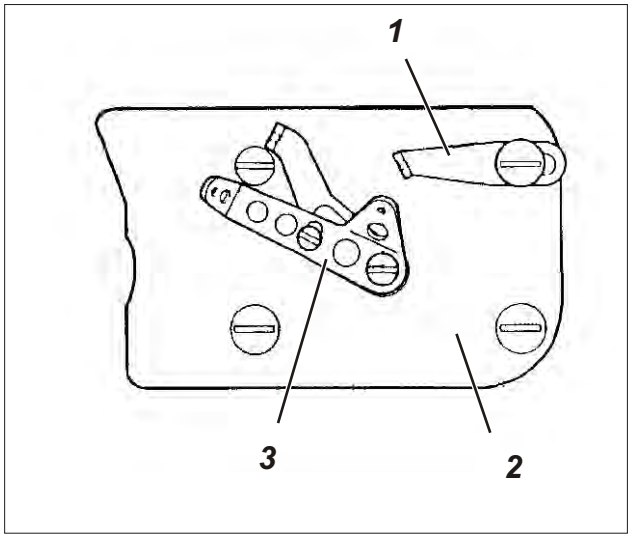

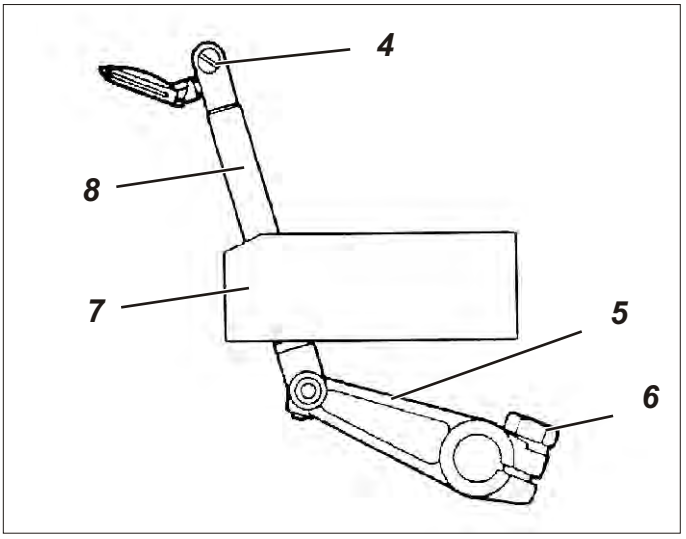

Caution: Risk of injury!

Switch the main switch off.

Check and adjust the hook only with the sewing unit switched off.

Cross-line adjustment

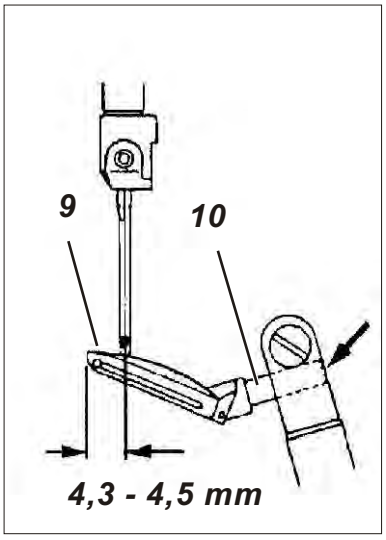

Standard checking

When the **right** hook is in its top reverse point, the distance between hook tip 9 and the middle of the needle should amount to 4.3 - 4.5 mm.

- Screw off thread guides 1 and 3 as well as cover 2.
- Move the hook in its top dead centre by handwheel.
- Loosen screw 4 until the hook can just be pushed.
- Shift the hook in such a way that the hook shank (1) is flush with the right side of the hook holder.
- Loosen screw 6 a little.
- Turn lever 5 in such a way that there is a distance of 4.3 - 4.5 mm between hook tip and the middle of the needle.
  Take care that the bar 8 in the bearing 7 does not move too heavy.
- Tighten screw 6.

Note

Do not yet tighten screw 4.

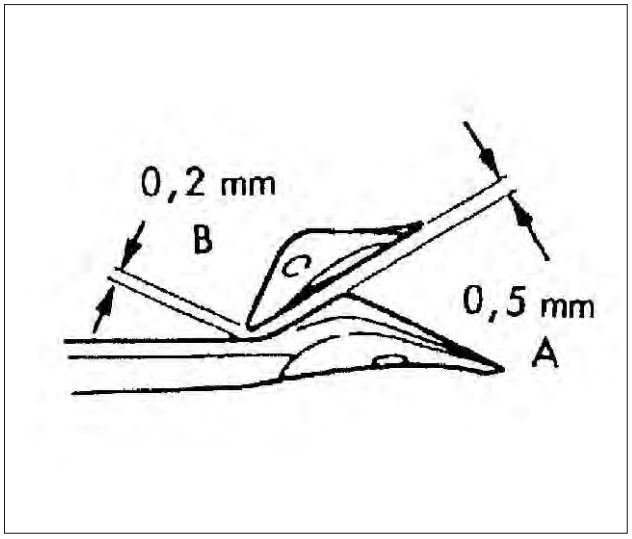

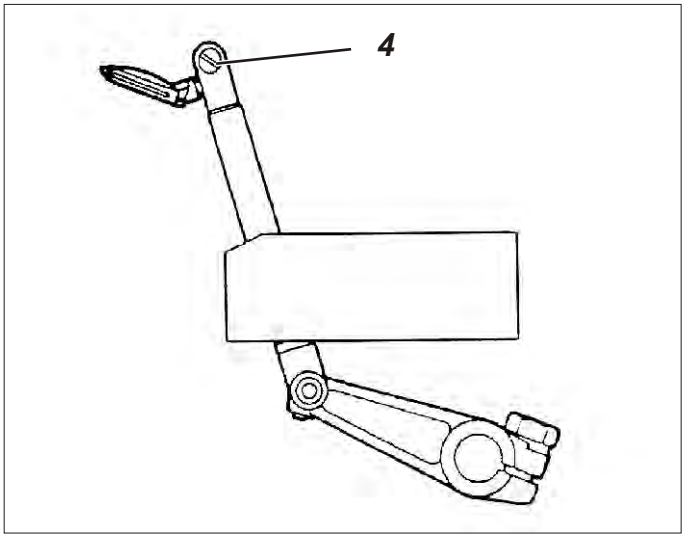

Adjustment in sewing direction

Standard checking

When the right hook crosses the left hook, the distance “A” should amount to 0.5 mm and the distance “B” to 0.2 mm.

Correction

- Turn handwheel in direction of rotation until the right hook crosses the left hook.
- Turn and shift the right hook in such a way that the distance “A” amounts to 0.5 mm and the distance “B” to 0.2 mm.
- Tighten screw 4 in this position.
- Check all adjustments once again and readjust, if necessary.
- Remount thread guides 1 and 3 as well as cover 2.
- Adjust thread guides according to chapter “thread regulation of the overlock hooks”.

Note

The right overlock hook is dependent on the needle size.
Use hook No. 28 for needles Nm 60 - 80 and hook No. 22 for needles Nm 80 - 100.

2.3 Adjusting the needle protection

2.3.1 Hind needle protection

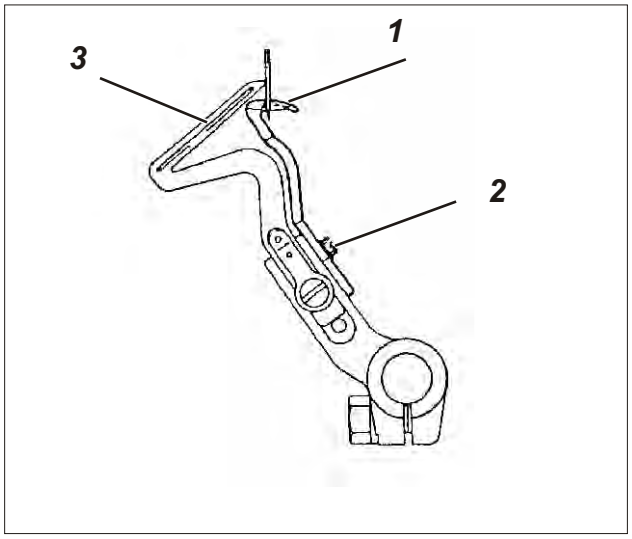

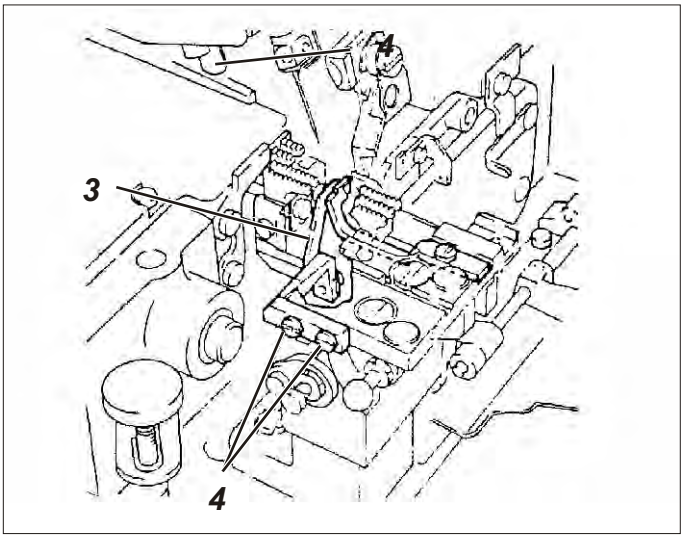

Caution: Risk of injury!

Switch the main switch off.

Check and adjust the needle protection only with the sewing unit switched off.

Standard checking

When the tip of the left hook 3 is at the level of the middle of the needle, the needle protection 1 should abut on the needle. There should be a distance of 0.0 - 0.05 mm between hook tip and needle.

- Turn handwheel in direction of rotation until the hook tip points in the needle direction.
- Check the distance between hook tip and needle.

Correction of the mobile version

- Turn handwheel in direction of rotation until the hook tip points in the needle direction.
- Loosen screw 2.
- Shift the needle protection 1 in such a way that it abuts on the needle and there is a distance of 0.0 - 0.05 mm between hook tip and the middle of the needle.
- Tighten screw 1.

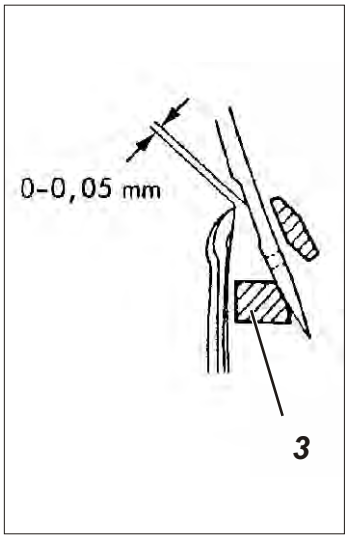

Correction of the stationary version

- Turn handwheel in direction of rotation until the hook tip points in the needle direction.
- Loosen screws 4.
- Shift the needle protection 3 in such a way that it abuts on the needle and there is a distance of 0.0 - 0.05 mm between hook tip and the middle of the needle.
- Tighten screws 4.

2.3.2 Front needle protection

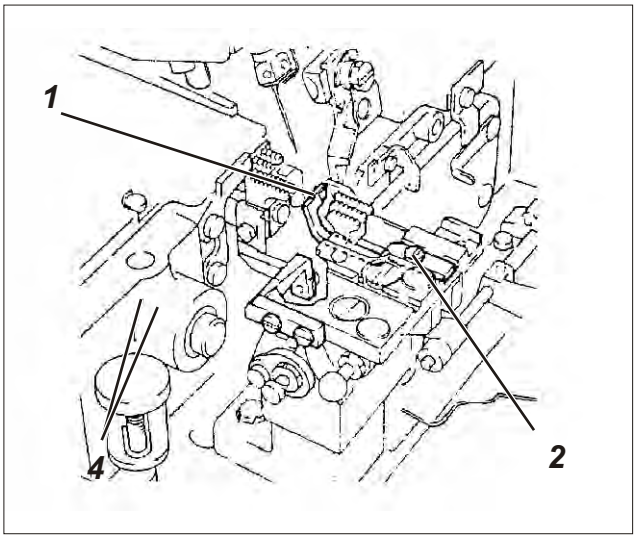

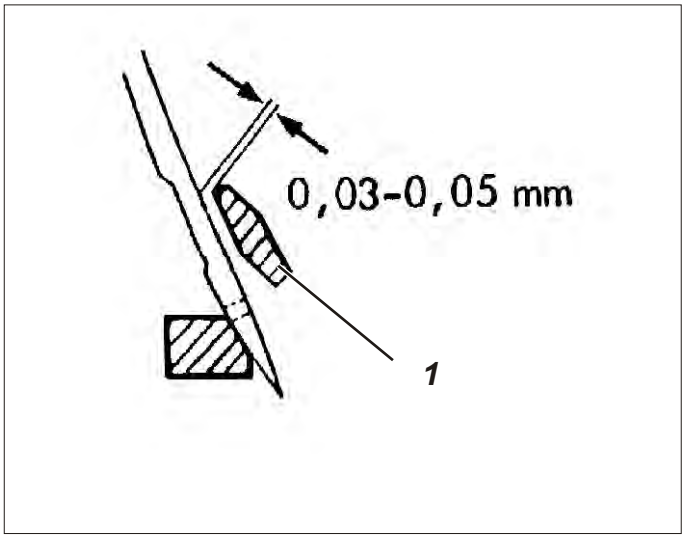

Caution: Risk of injury!

Switch the main switch off.

Check and adjust the needle protection only with the sewing unit switched off.

Standard checking

In the lower dead centre of the needle the distance between needle protection 1 and needle should amount to 0.03 - 0.05 mm.

- Turn handwheel in direction of rotation until the needle is in its lower dead centre.
- Check the position of the front needle protection.

Correction

- Turn handwheel in direction of rotation until the needle is in its lower dead centre.
- Loosen screw 2.
- Shift the needle protection 1 in such a way that there is a distance of 0.03 - 0.05 mm between needle protection and needle.
- Tighten screw 2.

2.4 Adjusting the feed-dog

2.4.1 Feed-dog position

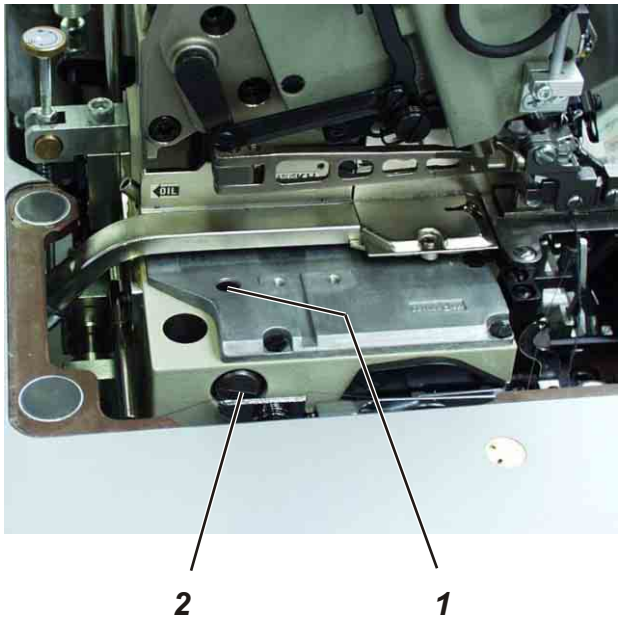

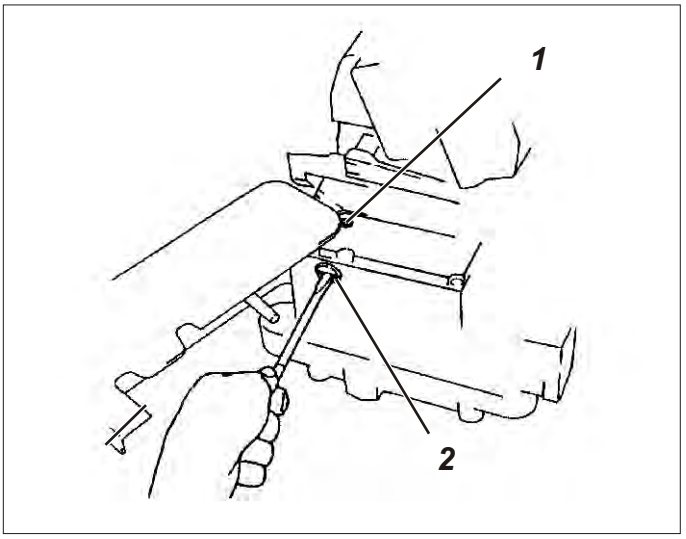

Caution: Risk of injury!

Switch the main switch off.

Check and adjust the feed-dog position only with the sewing unit switched off.

Standard checking

In their highest position the feed-dogs should be horizontal.

- Turn handwheel in direction of rotation until the feed-dogs are in their highest position.
- Check the position of the feed-dogs.

Correction

- Turn handwheel in direction of rotation until the feed-dogs are in their highest position.
- Loosen screw 1.
- Turn screw 2.

Feed-dogs are horizontal

Feed-dogs are inclined backwards

Feed-dogs are inclined forwards

- Tighten screw 1.

2.4.2 Feed-dog height

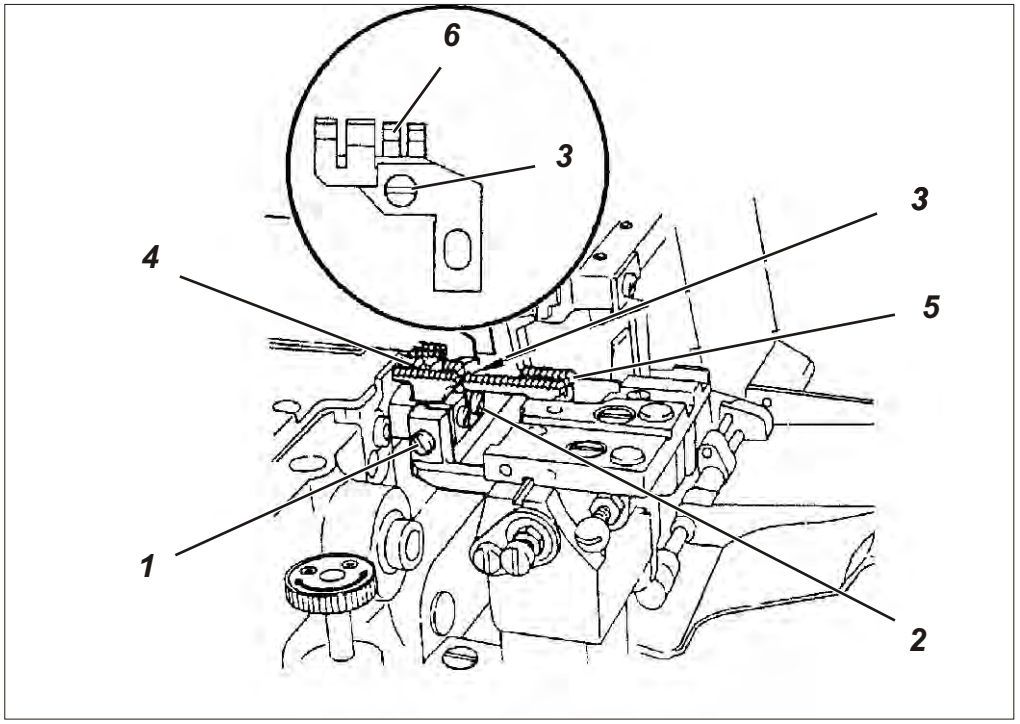

Caution: Risk of injury!

Switch the main switch off.

Check and adjust the feed-dog height only with the sewing unit switched off.

Standard checking

When the feed-dogs are in their highest position, the teeth of the main feed-dog 4 should be 0.8 mm above the top edge of the throat plate, the teeth of the differential feed-dog 5 0.9 to 1.0 mm and the teeth of the auxiliary feed-dog 6 0.6 to 0.7 mm.

- Turn the handwheel in direction of rotation until the feed-dogs are in their highest position.
- Check the position of the feed-dogs to the throat plate.

Correction

- Unscrew throat plate.
- Loosen screws 1, 2 and 3 a little.
- Put throat plate on again.
- Set the height of the feed-dogs.
- Remove the throat plate.
- Tighten screws 1, 2 and 3.
- Put throat plate on again and tighten.

2.5 Presser foot

2.5.2 Presser foot lift head EX5204

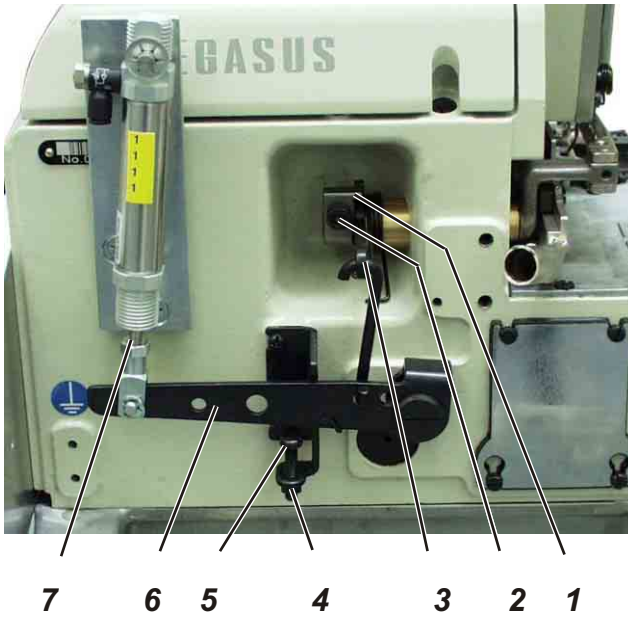

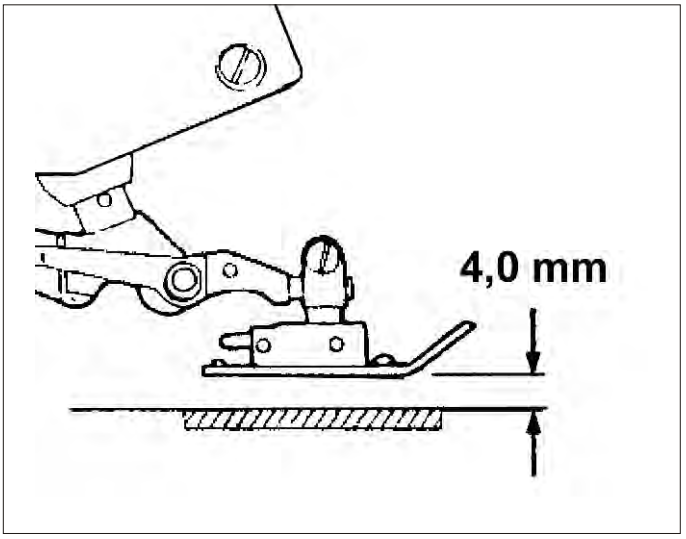

Caution: Risk of injury!

Switch the main switch off.

Check and adjust the presser foot lift only with the sewing unit switched off.

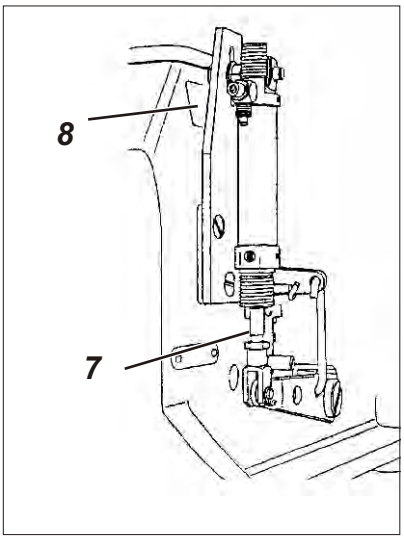

Standard

When the piston rod 7 is extended, the lever 6 should abut on screw 5 and the clearance under the sewing feet should amount to 4 mm.

Correction

- Loosen counternut 4 and screw the screw 5 down completely.
- Swivel the sewing foot in.
- Turn handwheel in direction of rotation until the teeth of the feed-dog are underneath the top edge of the throat plate.
- Loosen screw 2 and press ring 1 backwards as far as it will go.
- Tighten screw 2 in this position.
  Take care that ring 1 and lever 3 have no axial backlash.
- Press lever 6 down until there is a distance of approx. 4 mm between sewing foot and throat plate.
- Let screw 5 abut on lever 6 in this position and fix it by a locknut.

Note

If lever 6 does not abut on screw 5 when the piston rod 7 of the cylinder is extended, please proceed as follows:

- Loosen nut 8.
- Shift cylinder 1 correspondingly.
- Tighten nut 8.

2.5.2 Presser foot lift head S52

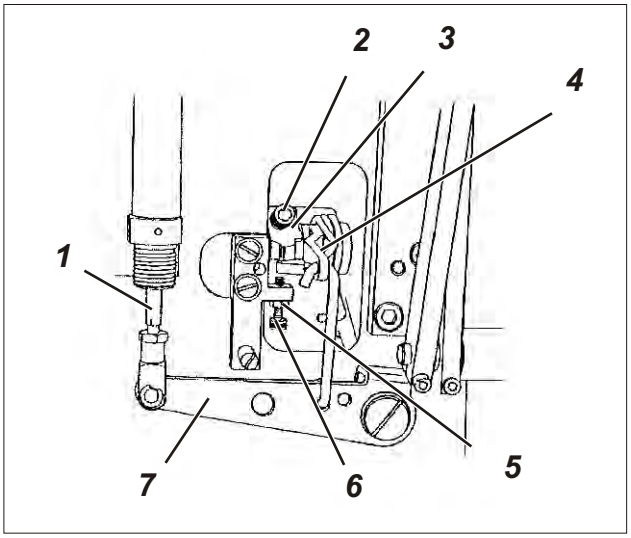

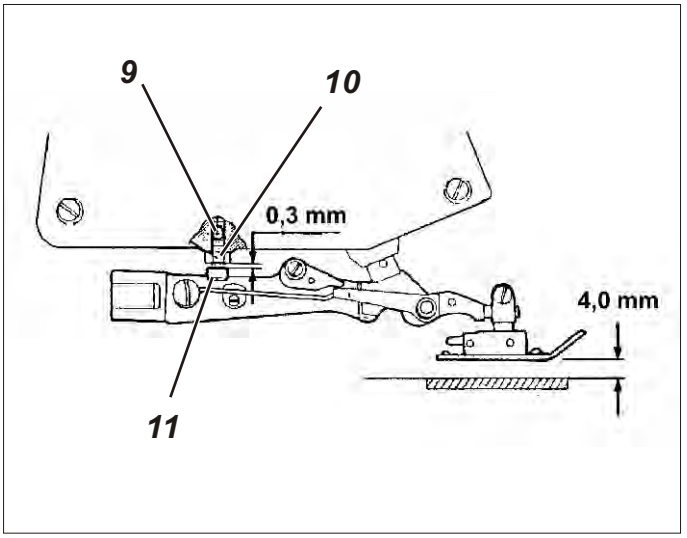

Caution: Risk of injury!

Switch the main switch off.

Check and adjust the presser foot lift only with the sewing unit switched off.

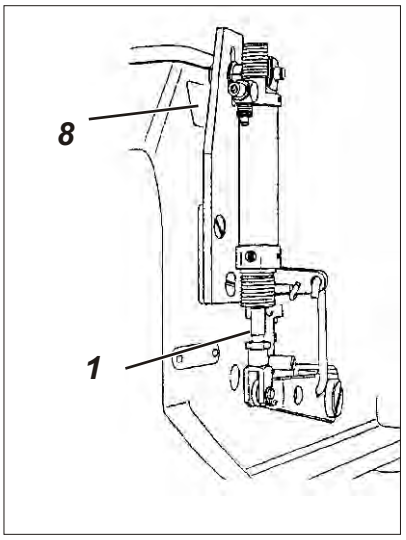

Standard

When the piston rod 1 is extended, the lever 4 should abut on screw 6 and the clearance under the sewing feet should amount to 5 mm. Furthermore there should be a distance of 0.3 mm between stop 11 and screw 10 in this position.

Correction

- Loosen counternut 5 and screw the screw 6 down completely.
- Swivel the sewing foot in.
- Turn handwheel in direction of rotation until the teeth of the feed-dog are underneath the top edge of the throat plate.
- Loosen screw 2 and press ring 3 backwards as far as it will go.
- Tighten screw 2 in this position.
  Take care that ring 3 and lever 4 have no axial backlash.
- Press lever 7 down until there is a distance of approx. 5 mm between sewing foot and throat plate.
- Let screw 6 abut on lever 4 in this position and fix it by a locknut.

Note

If lever 4 does not abut on screw 6 when the piston rod 1 of the cylinder is extended, please proceed as follows:

- Loosen nut 8.
- Shift cylinder 1 correspondingly.
- Tighten nut 8.
- Loosen screw 9.
- Turn screw 10 in such a way that there is a distance of approx. 0.3 mm between screw 10 and stop 11.
  Take care that lever 7 is pressed down as far as it will go.
- Tighten screw 9.

2.5.2 Presser foot

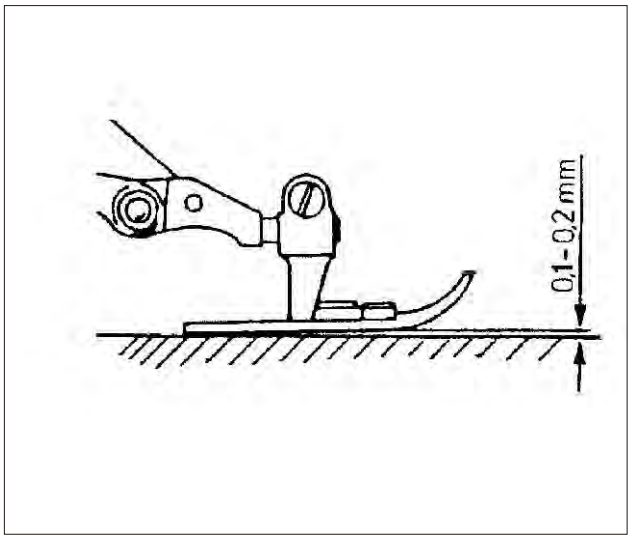

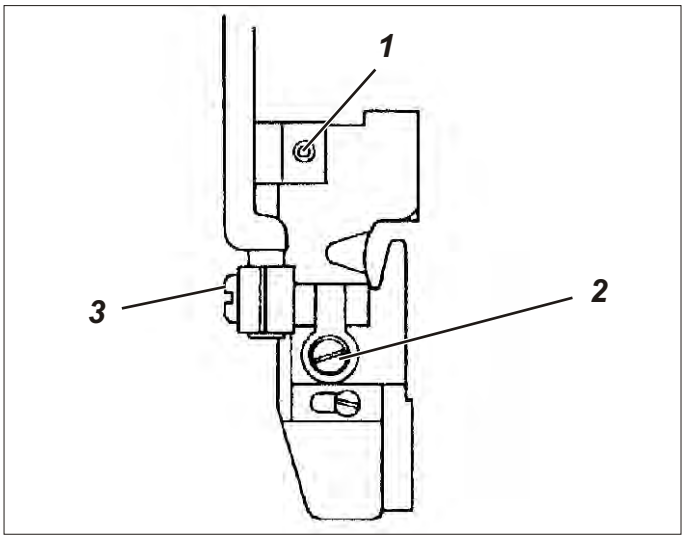

Caution: Risk of injury!

Switch the main switch off.

Check and adjust the presser foot only with the sewing unit switched off.

Standard checking

When the feed-dogs are in their lowest position, the sole of the presser foot should be 0.1 to 0.2 mm up at the front.
Furthermore, the needle hole of the sewing foot and that of the throat plate should be in line.

- Move the feed-dogs in low position.
- Check the presser foot position.

Correction

- Loosen screws 2 and 3.
- Shift the presser foot in such a way that the needle hole of the presser foot and that of the throat plate are in line.
- Tighten screws 2 and 3.
  Take care that the sole of the presser foot is above the throat plate in parallel position.
- Turn screw 1 in such a way that the sole of the presser foot is 0.1 to 0.2 mm up at the front.

2.6 Upper and lower knife

2.6.1 Changing and adjusting the upper knife

Head EX 5205-22/233-6KS

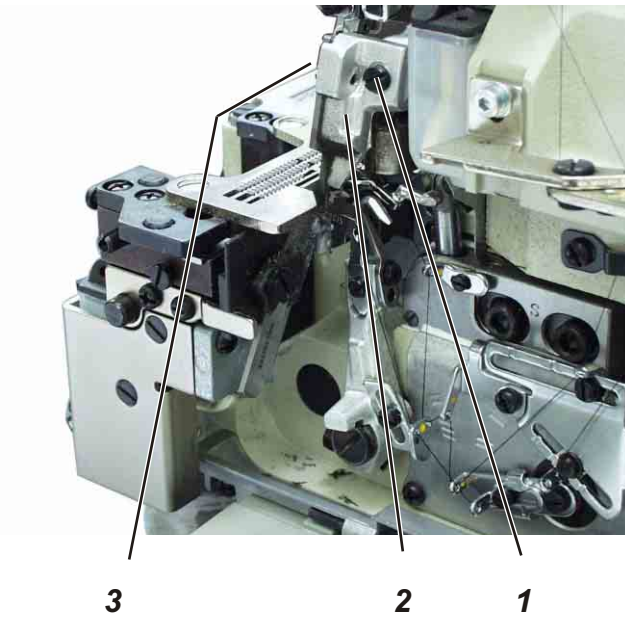

Head S52 134B

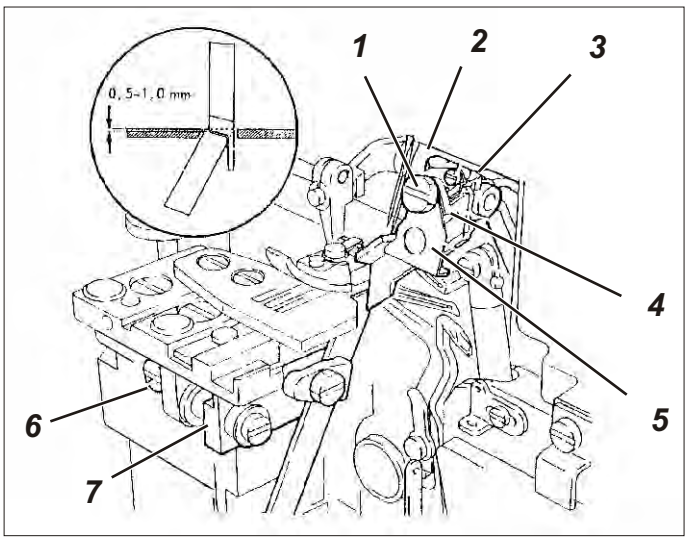

Caution: Risk of injury!

Switch the main switch off.

Change and adjust the upper knife only with the sewing unit switched off.

Standard

In the lowest position of the upper knife the front edge of the blade should be 0.5 to 1.0 mm underneath the top edge of the throat plate.

Correction

- Turn the handwheel until the needles are in their top reverse point and swivel the sewing foot out.
- Screw off screw 1.
- Remove the knife holder 2 with the knife.
- Loosen screw 3 and remove the knife.
- Insert a new,sharp knife and tighten with screw 3.
- Insert knife holder 2 and tighten slightly with screw 1.
- Turn the handwheel until the knife is in its lowest position.
- Shift the knife in such a way that it slightly abuts on the lower knife and the front edge of the blade is approx. 0.5 to 1.0 mm underneath the top edge of the throat plate.

Head S52 134B only

- Let the stops 4 and 5 abut on the knife in this position and tighten screws 1 and 3.
- Turn the handwheel until the knife is in its highest position.
- Loosen screw 6.
- Shift the lower knife to the left and let it spring against the upper knife.
- Tighten screw 6.

2.6.2 Changing and adjusting the lower knife

Head EX 5204-02/233-5/KS 371

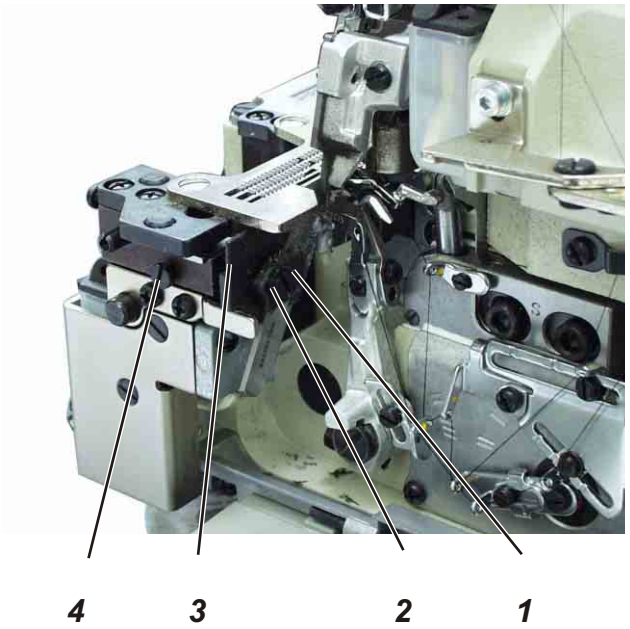

Head S52 134B

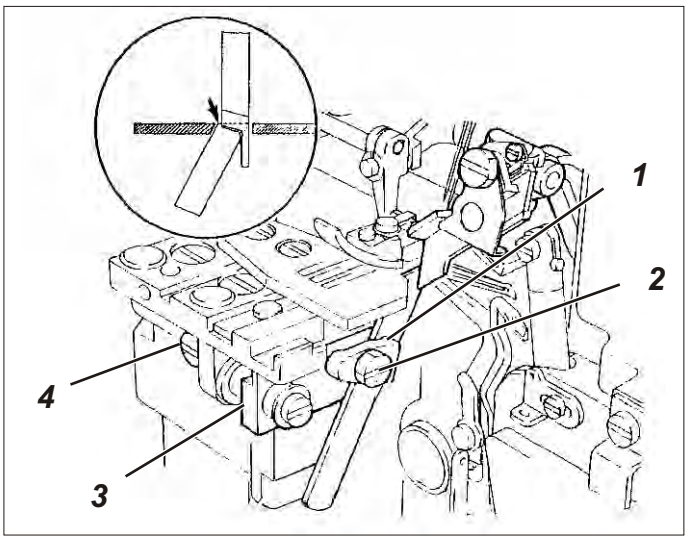

Caution: Risk of injury!

Switch the main switch off.

Change and adjust the lower knife only with the sewing unit switched off.

Standard

The blade of the lower knife has to be flush with the top edge of the throat plate.

Correction

- Remove the fabric sliding sheet.
- Swivel the sewing foot out.
- Loosen screw 4.
- Draw the holder of the lower knife 3 to the left as far as it will go and tighten screw 4 slightly.
- Loosen screw 2 and remove the old knife.
- Insert a new, sharp knife in guide 1 in such a way that the blade is flush with the top edge of the throat plate.
- Tighten screw 2.
- Turn the handwheel until the upper knife is in its highest position.
- Loosen screw 4 and let the holder of the lower knife 3 spring against the upper knife.
- Tighten screw 4.

2.7 Thread regulation of overlock hook

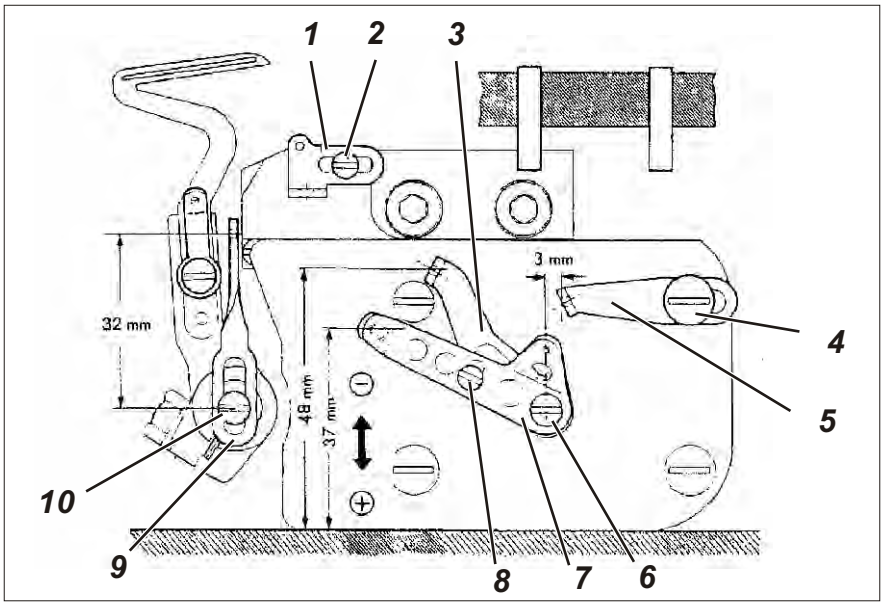

Caution: Risk of injury!

Switch the main switch off.

Check and adjust the thread regulation only with the sewing unit switched off.

Standard

The position of the individual thread guides or thread pullers is dependent on the material, the sewing thread and the stitch type. Therefore the following setting values have to be regarded as standard values only.

Correction

- Turn the handwheel until the right hook is in its top reverse point.
- Loosen screw 10 and shift the thread puller 9 in such a way that there is a distance of approx. 32 mm between the middle of the screw and the middle of the eyelet.
- Tighten screw 10.
  Take care that the thread puller 9 is in vertical position.
- Loosen screws 6 and 8 a little.
- Position the thread pullers 3 and 7 as shown in the illustration.
- Tighten screws 6 and 8.
- Loosen screw 4 a little.
- Position the thread guide 5 as shown in the illustration.
- Tighten screw 4.
- Loosen screw 2 a little.
- Shift the thread guide 1 in such a way that the screw 2 is in the centre of the longitudinal hole.
- Tighten screw 2.

Note

If the seam requires more or less thread, shift the thread pullers 3 and 7 in the direction “+” or “-” respectively.

3. Adjusting the sewing unit

3.1 Adjusting the light barrier

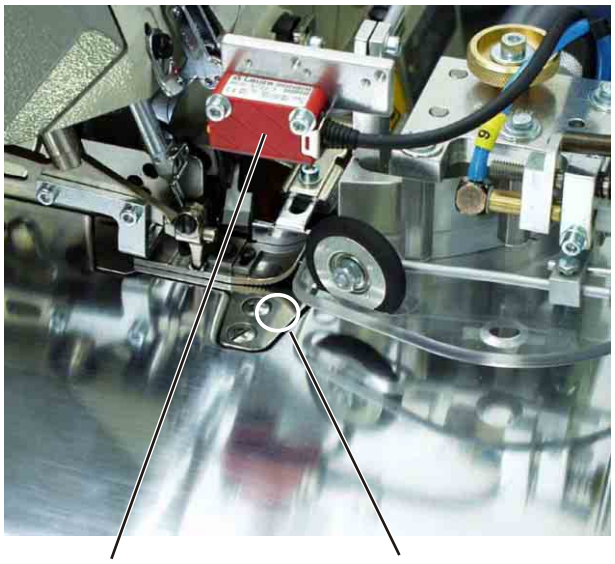

Caution: Risk of injury!

The adjustment of the light barrier is done with the sewing unit switched on.

Carry out adjustment and function test with utmost caution.

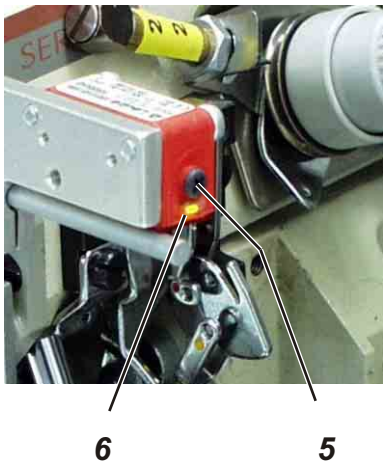

Aligning the light barrier

The light barrier 2 has to be aligned to the area 1 of the machine head.

- Loosen screw 3.
- Align the light barrier support 4 correspondingly.
- Tighten screw 3.

Adjusting the light barrier intensity

- Turn the sensitivity potentiometer 5 at the front above the light-emitting diode 6 to the left stop (minimum sensitivity).
- Turn the potentiometer in clockwise direction until the light-emitting diode 6 switches on.
- For a safe light barrier function turn the potentiometer once again in clockwise direction.

If the light-emitting diode does not shine, the light barrier should be cleaned, reset or exchanged.

3.2 Direct sewing drive

3.2.1 Setting the reference

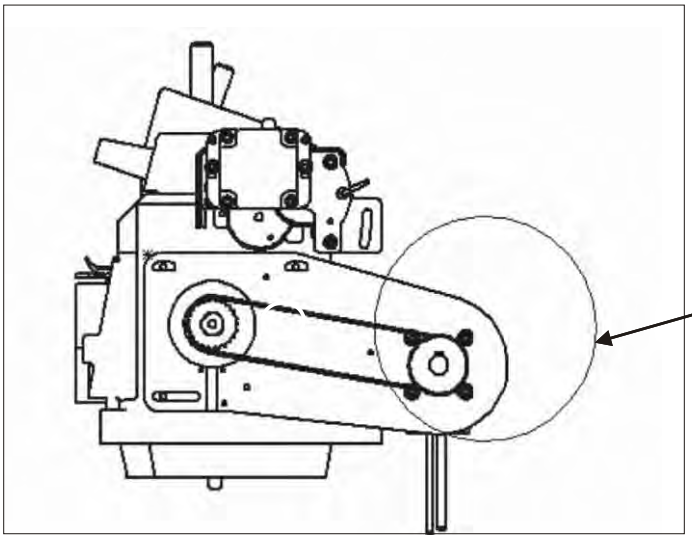

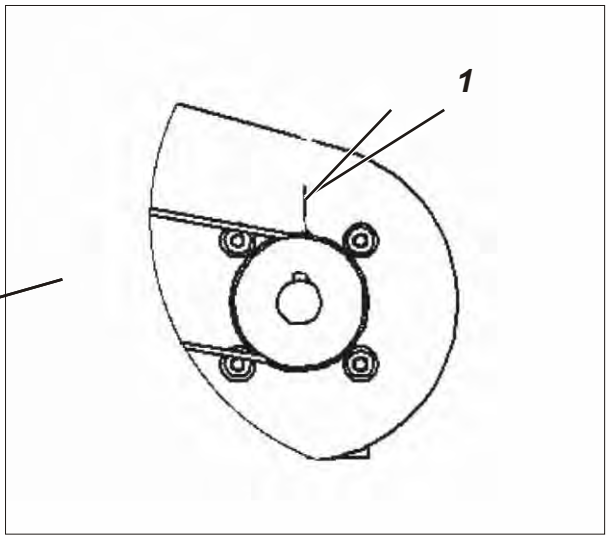

Caution: Risk of injury!

Switch the main switch off.

Check and adjust the hook setting only with the sewing unit switched off.

Standard

When the needle is in the position "**7 mm after the bottom dead centre**", the drive belt has to be put on in such a way that the feather key 2 in the motor shaft points to the marking 1 in the motor casing.

Correction

- Remove the toothed belt.
- Move the needle bar in the position "**7 mm after the bottom dead centre**" by handwheel.
- Turn the motor shaft in such a way that the feather key 2 in the motor shaft points to the marking 1 in the motor casing.
- Put the toothed belt on again.

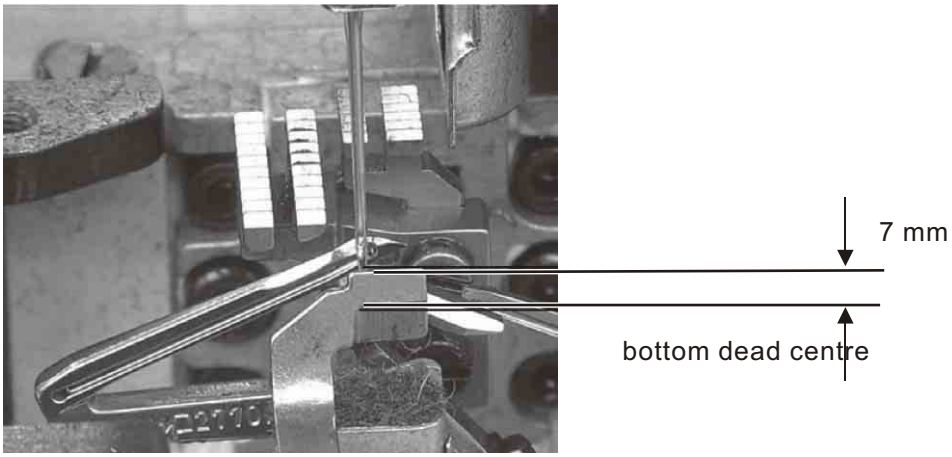

4. Oil lubrication

Caution: Risk of injury !

Oil can cause skin eruption.
Avoid a longer contact with the skin.
Wash yourself thoroughly after a contact.

ATTENTION !

The handling and disposal of mineral oils is subject to legal regulations.
Deliver used oil to an authorized collecting station.
Conserve your environment.
Be careful not to spill any oil.

4.1 Oil change and oil filter change

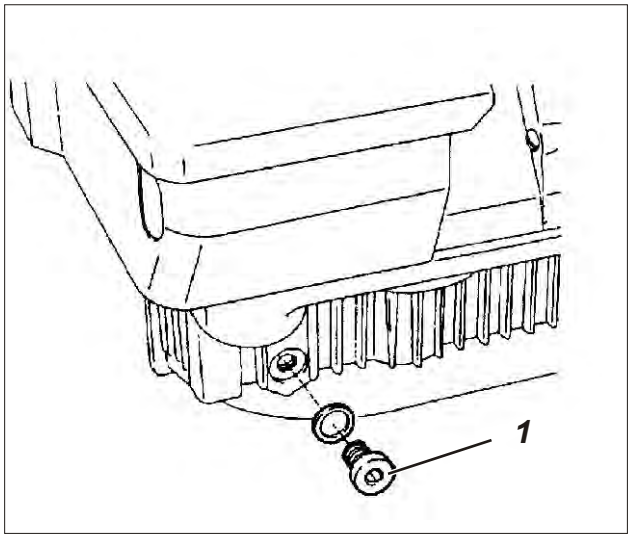

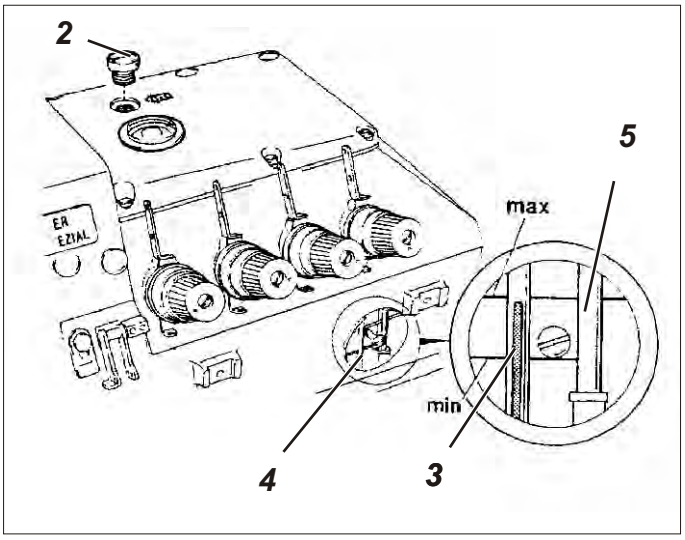

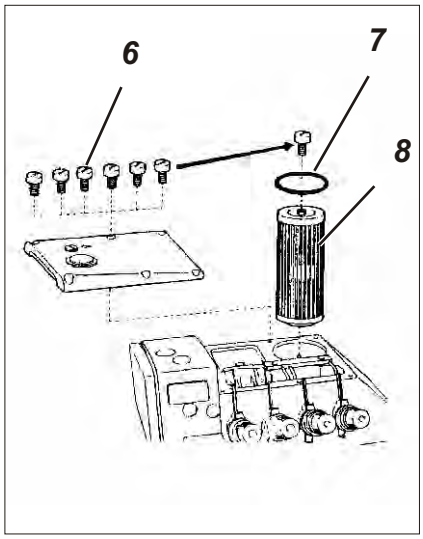

4 weeks after the initial start-up and subsequently every two years an oil change has to be carried out with the machine head disassembled.

The oil filter should be cleaned or exchanged every two years.

Note

If the oil pressure gauge 5 does not move downwards when the machine head is running or if the oil is dirty, the oil filter has to be cleaned or exchanged.

- Unscrew the drain screw 1 and collect the used oil in a collecting basin.
- Screw drain screw 1 in again.
- Unscrew screws 6 of the cover.
- Screw one of the screws 6 in filter 8 and unscrew the filter.
- Clean or exchange filter 8.
- Insert a new gasket 7, put the cover on again and tighten.
- Unscrew screw 2 and fill in oil until the point of the oil level indicator 3 has reached the upper marking of the oil inspection glass 4.
  We recommend to use oil with a density of 0.865 g/cm³ at 15 ° C.
- Insert screw 2 again.

5. Maintenance

Caution: Risk of injury !

Switch the main switch off.

The maintenance of the sewing unit must only be done with the machine switched off.

The daily or weekly maintenance work (cleaning and oiling) to be carried out by the operators of the sewing unit is described in the operating instructions (chapter 8). This is listed in the following table for the sake of completeness only.

Maintenance work to be carried out	**Operating hours**			
	8	**40**	**160**	**500**
Machine head				
- Remove sewing dust and thread remainders	X			
- Check the oil level		X		
- First oil change			X	
- Subsequent oil change	every 2 years			
Control box				
- Remove sewing dust and thread remainders	X			
- Keep the fan grill clean	X			
Suction device				
- Empty the container	X			
- Clean the zone under the fabric sliding sheet from sewing dust and thread remainders		X		
Pneumatic system				
- Check the water level in the pressure regulator	X			
- Clean the filter insert in the maintenance unit				X
- Make leak test of the system				

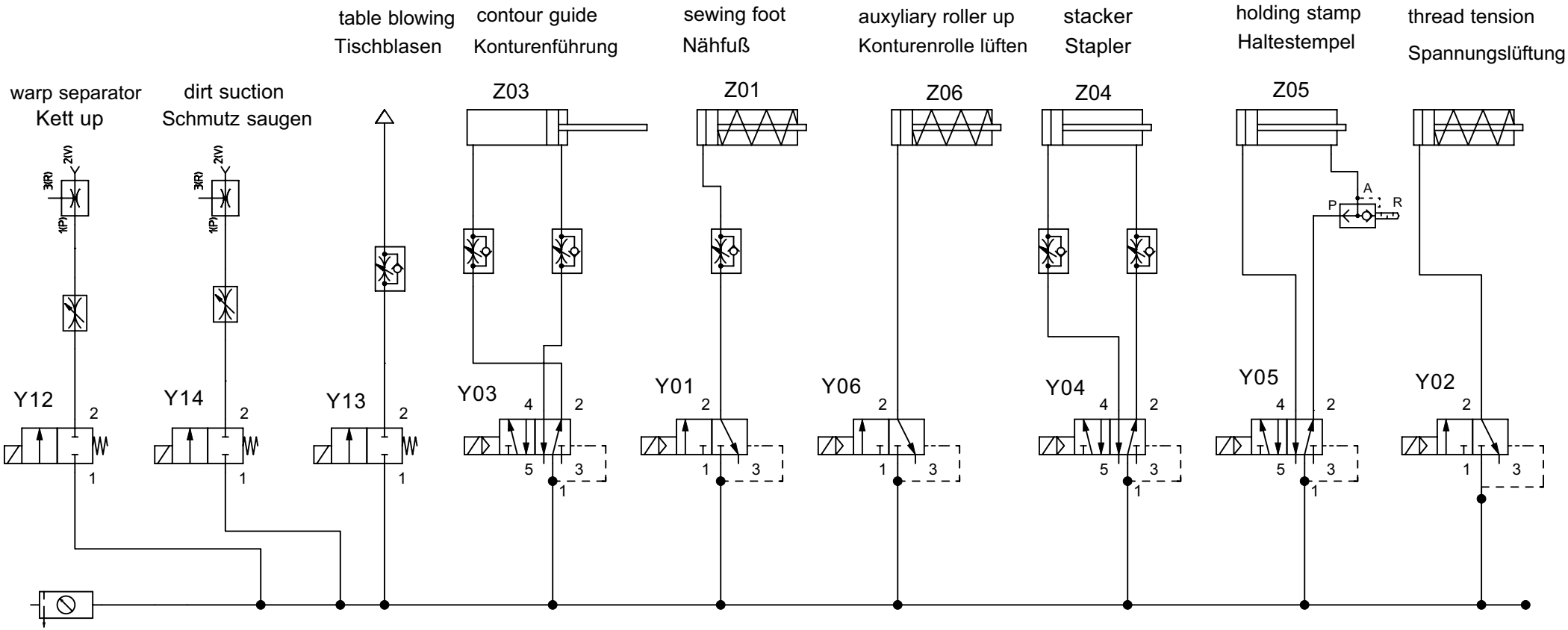

	Aenderung	Datum	Name		Datum	Name	Benennung:	Zeichnungs-Nr.	Anlage	Blatt Nr.
a				gez.	30.11.05	Roth	Pneumatikplan 1220-6	P 1220-6	Ort	von Blatt
b										
c				gepr.						
d										

DÜRKOPP ADLER AG
Potsdamer Str. 190
33719 Bielefeld
Germany
Phone: +49 (0) 521 925 00
E-Mail: service@duerkopp-adler.com
www.duerkopp-adler.com

Subject to design changes - Part of the machines shown with additional equipment - Printed in Germany
© Dürkopp Adler AG - Original Instructions - 0791 122002 EN - 01.0 - 07/2016